Model	Description	Wattage Range (W)	Page
DBR	Dynamic Braking Resistor (20K~28KW)	20K~28K	23
LOAD BANK	부하 저항기 (Load Bank)	주문제작	24
CRANC RESISTOR	크레인 저항기 (Cranc Resistor)	주문제작	25, 26
HRGE	고저항접지 저항기 (High Resistance Grounding Equip)	주문제작	27, 28
NGR	중성점 저항기 (Neutral Grounding Resistor)	주문제작	29, 30
SHUNT 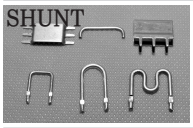	션트 저항기 (Current Sensing Resistor)	주문제작	31
CDR	콘덴서 방전저항기 (Condenser Discharge Resistor)	7~20	32
RWC	시멘트 저항기 (Cement Resistor)	2~40	33~35
MPR 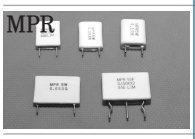	금속판 저항기 (Metal Plate Resistor)	2~10	36
RW 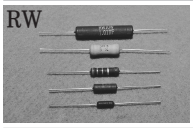	정밀급 권선 저항기 (Precision Wire Wound Resistor)	0.5~10	37
MOR 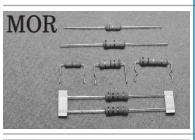	산화금속피막 저항기 (Metal Oxide Film Resistor)	0.5~5	38
	Taping / Forming	Taping 0.5~2 Forming 0.5~5	39

04 電力形 메탈클레드 卷線抵抗器

Power Type Metal-Clad Wire-Wound Resistor

特徵 Features

Molded construction gives complete environmental protection.
"RH"is housed aluminum Resistor.
Screw mounts on chassis to utilize heat-sink effect.
Designed to utilize heat sink effect of chassis.

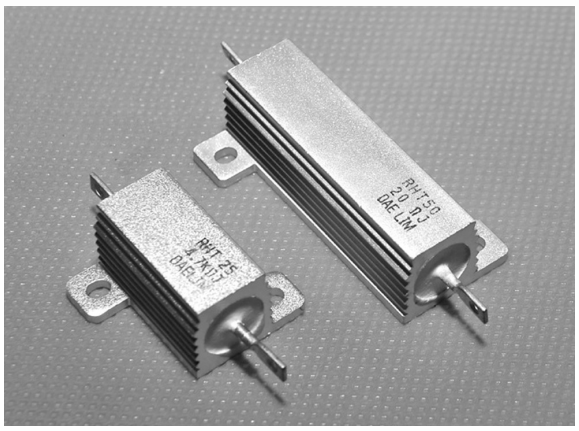

用途 Applications

Military equipment, motor control circuit, loader, UPS, AVR
Battery charge, precision measurement.
방산방비, 전동지게차, 방전용, 로드용, 모터제동장비, 계측장비

定格 Rating

Model	Element Type	Power Rating(25℃)		Resistance Range		Resistance Tolerance(%)
		with Heat Sink	Free Air	Inductive	Non-Inductive	
RH 25	Wire wound	20W	8W	0.02~25㎏	0.1~10㎏	±0.5(D) ±1(F) ±2(G) ±5(J)
RH 50	Wire wound	30W	10W	0.05~50㎏	0.2~20㎏	

• 30W on heat sink(178×127×51×1㎜), 50W on heat sink(310×310×2㎜)

主要한 性能 Typical Performance

Temperature Range	-55℃~250℃
Insulation Resistance	20MΩ minimum
Dielectric Strength	AC 1500V, Maximum leakage current : 2mA
Short Time Overload	±[1%+0.05Ω] 5×power rating 5 sec
Load Life	±[2%+0.05Ω] power rating 1.5h. on, 30Min, off 1000Hours
Thermal Shock	±[1%+0.05Ω] power rating 30Min, -55℃, 15~30Minutes

Surface Temperature Increase Versus Power Load

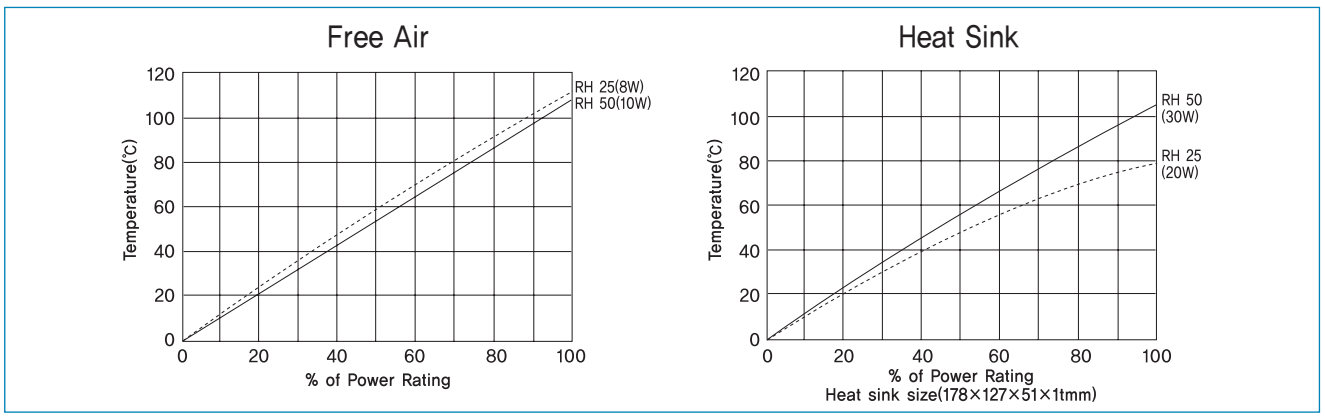

RHT-Type

● 外形寸法 Dimensions

Model	Dimensions			Weight [g]
	L1±0.2	L2± 0.15 / 0.1	L3±0.2	
RHT 25	49.4	27.1	18.3	16.5
RHT 50	70.8	49.3	39.7	35

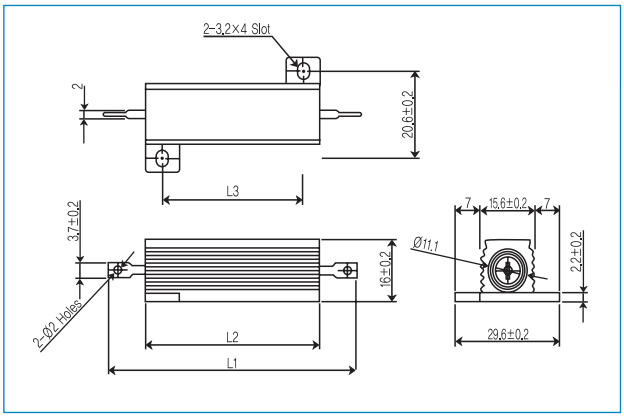

RHA-Type

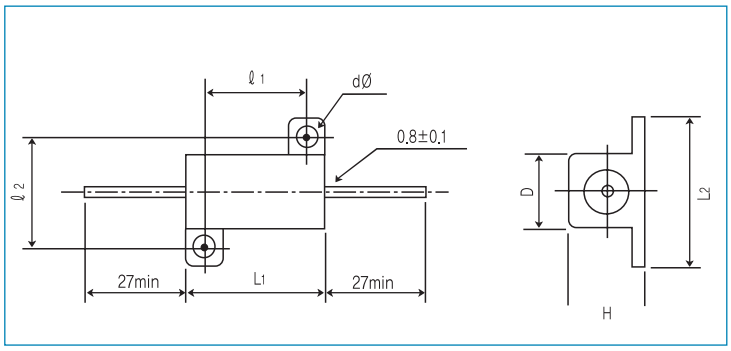

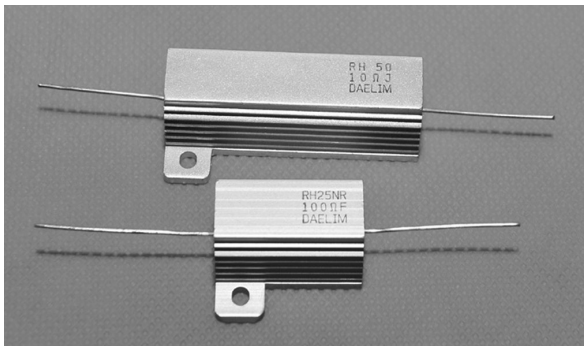

Model	Dimension(mm)						
	L_1±1	L_2±0.8	ℓ_1±0.8	ℓ_2±0.8	D±1	H±0.8	d±0.3
RHA 25	27.1	29.6	18.3	19.8	15.2	15.7	2~3.2×4 Slot
RHA 50	49.3	29.6	39.7	19.8	15.2	15.7	2~3.2×4 Slot

Derating Curve and Ordering Procedure Example

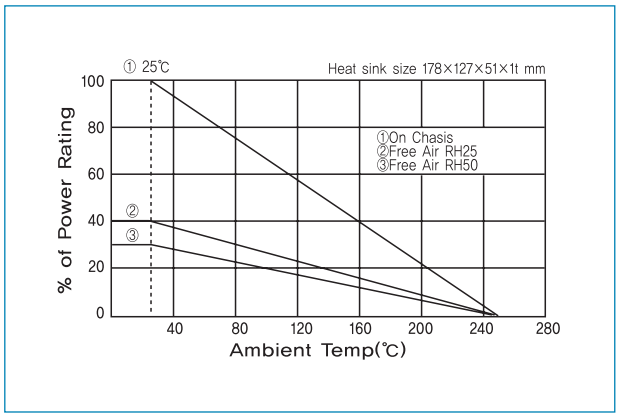

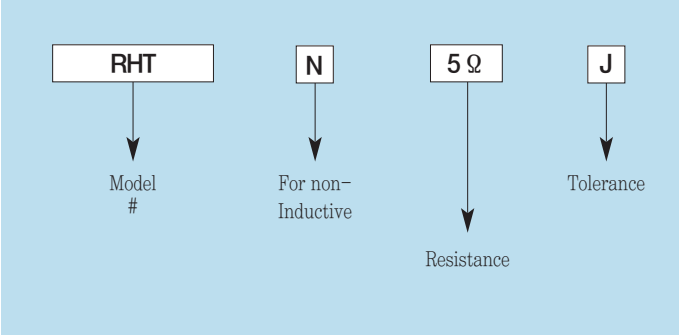

RHT : Terminal - Type
RHA : Axial Lead - Type

06 大電力形 메탈클레드 卷線抵抗器

High Power Type Metal-Clad Wire-Wound Resistor

The PRV(V=Vertical) & PRH(H=Horizontal) models are metal-clad, wire-wound, high-power resistors designed for industrial and other applications. Our extruded aluminum housing provides rugged and strong protection. These models are available with flying leads or tab terminals and can be ordered with inductive or non-inductive windings. Most common applications for these models are motor drives, braking and snubber applications and power sources for industrial equipment.

General Specifications

Model	Wattage with Heat Sink	Resistance Range (Ω)		Resistance Tolerance
		Inductive	Non-Inductive	
PRV/ PRH 60	60	0.1-270	0.1-5.6	±0.5(D) ±1.0(F) ±2.0(G) ±5.0(J) ±10(K)
PRV/ PRH 80	80	0.1-910	0.1-110	
PRV/ PRH 100	100	0.1-1.1K	0.1-240	
PRV/ PRH 120	120	0.1-1.3K	0.1-300	
PRV/ PRH 150	150	0.1-1.6K	0.1-390	
PRV/ PRH 200	200	0.1-2.2K	0.1-1K	
PRV/ PRH 300	300	0.1-2.7K	0.1-1.5K	
PRV/ PRH 400	400	0.1-4.3K	0.1-2.2K	
PRV/ PRH 500	500	0.1-6.8K	0.1-3K	

Also available in extended ohmic ranges of 1mΩ to 750KΩ

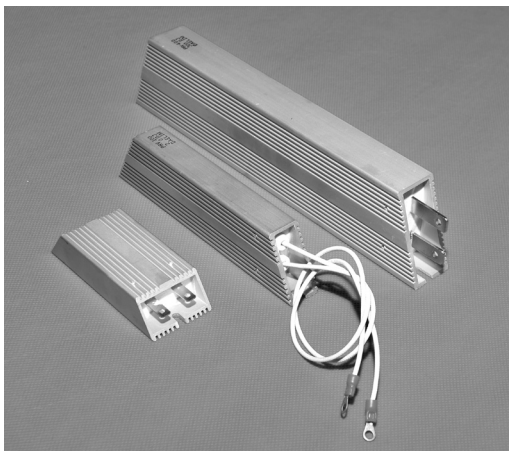

Characteristics

Values in [ ] mean change in Ω after test

Temperature Range	-55℃~+200℃
Insulation Resistance	20MΩ minimum
Dielectric Strength	Available options : AC 1500V, 3500V, 4500V, 5400V(Max. leakage current : 2mA)
Temp. Coefficient	±260ppm/℃ maximum
Short Time Overload	±[2%+0.05Ω] 10×wattage rating-5 seconds
Moisture Resistance	±[3%+0.05Ω] 40℃, 95% RH, DC100V case to terminal(500hrs.)
Thermal Shock	±[2%+0.05Ω] Wattage rating-30 minutes, -25℃-15minutes
Vibration	±[1%+0.05Ω] 10Hz-55Hz-10Hz (1minute) 2hrs, each direction
Moisture Load Life	±[3%+0.05Ω] 40℃, 95%RH, 0.1×wattage rating, 1.5hrs-on, 30minute-off, 500hrs.
Load Life	±[5%+0.05Ω] Wattage rating 1.5hrs. -on, 30minutes-off, 500hrs.

Surface Temperature Increase Versus Power Load

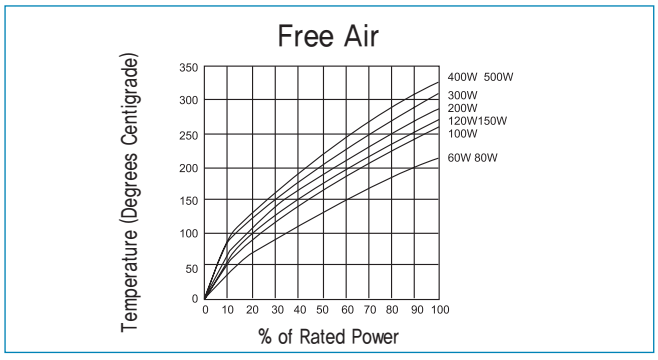

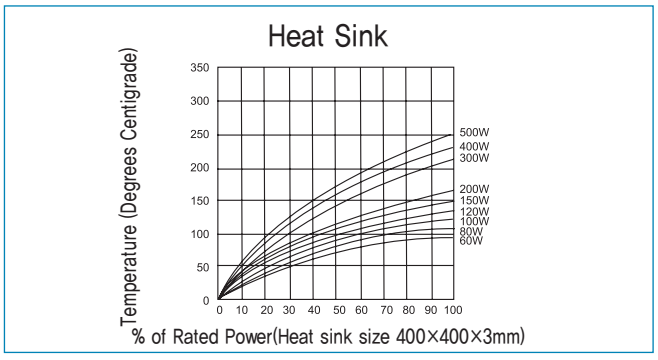

Dimensions

Model	Dimensions									Weight(g)		Flying Leads			
	L1±2	L2±2	L3±2	W±0.5	H±0.5	D1±0.5	D2±0.5	a	b	PRH	PRV	8mm²	5.5mm²	2mm²	1.25mm²
PRH/ PRV 60	100	87	60	41	22	4.3	8.65	10	12	110	113	X	X	0.10Ω ~ 0.99Ω	1Ω ~
PRH/ PRV 80	150	137	110	41	22	4.3	8.65	10	12	195	189	X	X		
PRH/ PRV 100	165	152	125	41	22	4.3	8.65	10	12	216	215	X	X		
PRH/ PRV 120	182	169	142	41	22	4.3	8.65	10	12	245	241	X	X		
PRH/ PRV 150	210	197	170	41	22	4.3	8.65	10	12	283	290	X	X		
PRH/ PRV 200	165	146	125	60	30	5.3	12	13	17	485	447	0.10Ω ~ 0.99Ω	1Ω ~ 4.99Ω	5Ω ~	X
PRH/ PRV 300	215	196	175	60	30	5.3	12	13	17	600	600				X
PRH/ PRV 400	265	246	225	60	30	5.3	12	13	17	770	780				X
PRH/ PRV 500	335	316	295	60	30	5.3	12	13	17	990	980				X

PRH

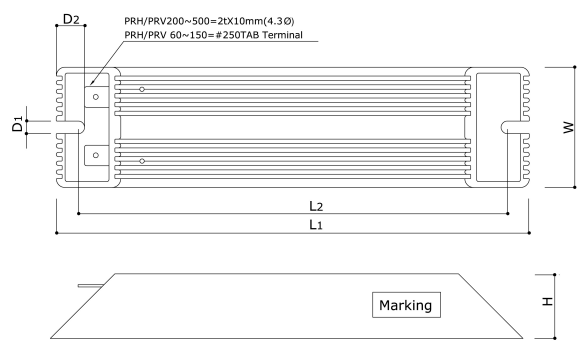

PRV

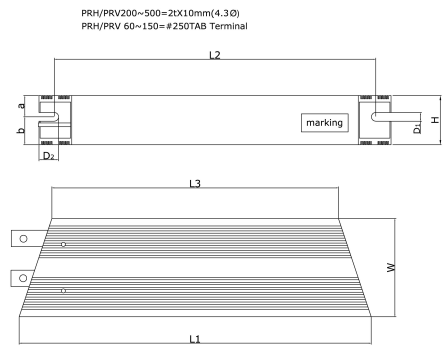

Derating Curve and Ordering Procedure Example

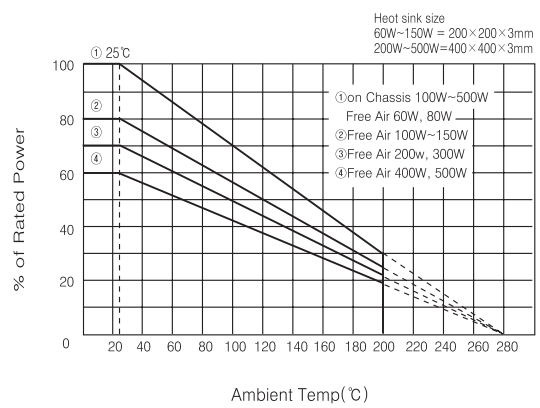

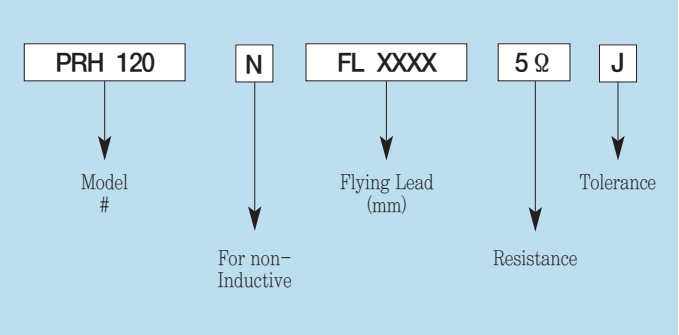

If you require flying lead resistors please add 'FL' next to the model number or non-inductive symbol 'N' Also add the length of the flying lead in millimeters.

08 大電力形 메탈클레드 卷線抵抗器

High Power Type Metal-Clad Wire-Wound Resistor

The PRV(V=Vertical) 600~1200 watt models are metal-clad, wire-wound, high-power resistors designed for industrial and other applications where high wattage is a must. Our extruded aluminum housing provides rugged and strong protection. Most common applications for these models are motor drives, braking and snubber applications and power sources for industrial equipment.

General Specifications

Model	Wattage with Heat Sink	Resistance Range (Ω)			Resistance Tolerance
		Inductive		Non-Inductive Parallel	
		Parallel	Series		
PRV600	600	0.1-9	9.1-94	0.1-20	±0.5(D) ±1.0(F) ±2.0(G) ±5.0(J) ±10(K)
PRV800	800	0.1-11	11.1-112	0.1-24	
PRV1000	1000	0.1-18	18.1-140	0.1-34	
PRV1200	1200	0.1-25	25.1-160	0.1-40	

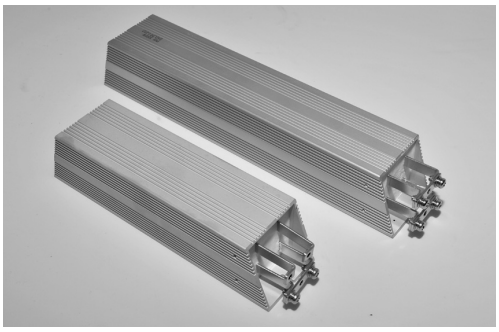

Characteristics

Values in [ ] mean change in Ω after test

Temperature Range		-55℃~+200℃
Insulation Resistance		20MΩ minimum
Dielectric Strength		Available options : AC 1500V, 3500V, 4500V, 5400V(Max. leakage current : 2mA)
Temp. Coefficient		±260ppm/℃ maximum
Short Time Overload	±[2%+0.05Ω]	10×wattage rating-5 seconds
Moisture Resistance	±[3%+0.05Ω]	40℃, 95% RH, DC100V case to terminal(500hrs.)
Thermal Shock	±[2%+0.05Ω]	Wattage rating-30 minutes, -25℃-15minutes
Vibration	±[1%+0.05Ω]	10Hz-55Hz-10Hz (1minute), 2hrs. each direction
Moisture Load Life	±[3%+0.05Ω]	40℃, 95%RH, 0.1×wattage rating, 1.5hrs-on, 30minute-off, 500hrs.
Load Life	±[5%+0.05Ω]	Wattage rating 1.5hrs. -on, 30minutes-off, 500hrs.

Derating Curve and Ordering Procedure Example

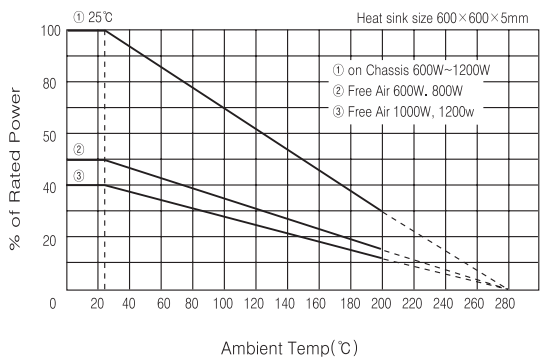

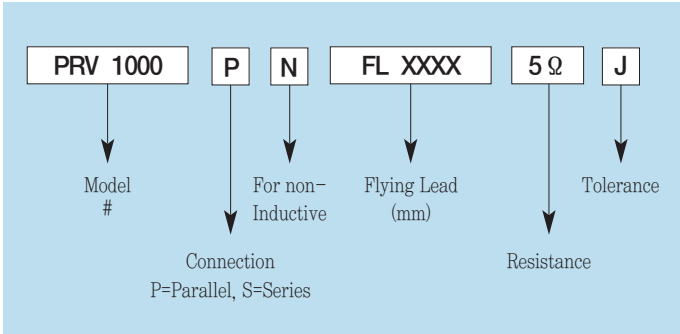

If you require flying lead resistors please add 'FL' next to the connection symbol or non-inductive symbol 'N'
Also add the length of the flying lead in millimeters.

Dimensions

Model	寸 法 Dimension(mm)			Weight (g)	Flying Lead	
	L1 ±2	L2 ±2	L3 ±2		8㎟	5.5㎟
PRV600	235	216	195	1165	0.1Ω ~ 0.99Ω	1Ω ~
PRV800	285	266	245	1500		
PRV1000	335	316	295	1835		
PRV1200	405	386	365	2304		

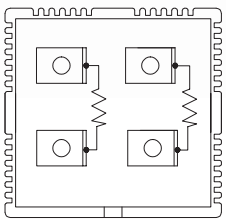

Each model in this range contains two identical, isolated resistors with two sets of terminals, a left upper and lower for one resistor, & a right upper and lower for the other, which can be connected in either series or parallel.

Dimensions

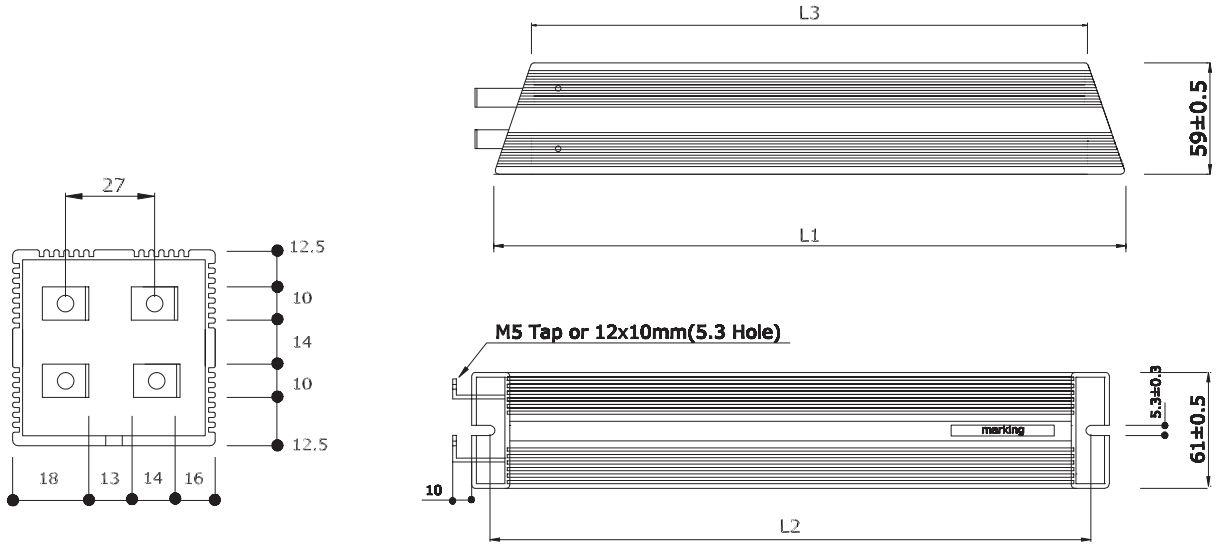

Surface Temperature Increase Versus Power Load

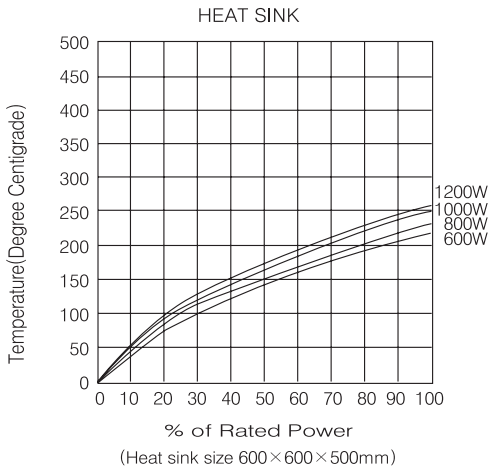

(Heat sink size 600×600×500mm)

大電力形 메탈클레드 卷線抵抗器

High Power Type Metal-Clad Wire-Wound Resistor

(실용신안등록 제20-0454290호, 의장등록 제30-0580232호

The PRV(V=Vertical) 1600-2800 watt models are metal-clad, wire-wound, high-power resistors designed for industrial and other applications. Our extruded aluminum housing provides rugged and strong protection. These models are available with Tab terminals. The most common applications for these models are motor driver, braking and snubber applications and power sources for industrial equipment.

General Specifications

Model	Rated Power		Resistance Range (Ω)	Resistance Tolerance
	With Heat Sink	In Free Air	Inductive	
PRV 1600	1600W	590W	1.0-76	F[±1%] J[±5%] K[±10%]
PRV 2000	2000W	660W	1.0-86	
PRV 2400	2400W	740W	1.0-92	
PRV 2800	2800W	750W	1.0-96	

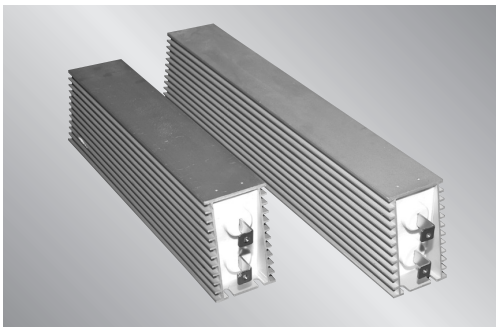

Characteristics

Values in [ ] mean change in Ω after test

Temperature Range		-55℃~+280℃
Insulation Resistance		20MΩ minimum
Dielectric Strength		Available options : AC 1500V, 2500V, 3500V, 4500V for 1minute (Max. leakage current : 2mA)
Temp. Coefficient		±260ppm/℃
Short Time Overload	±[3%+0.05Ω]	5-10×power rating-in 5 seconds
Moisture Resistance	±[3%+0.05Ω]	40℃, 95%RH, DC100V case to terminal(500hrs.)
Thermal Shock	±[5%+0.05Ω]	Power rating-30 minutes, -40℃, 15minutes
Vibration	±[2%+0.05Ω]	10Hz-55Hz-10Hz (1minute), 2hrs. each direction
Moisture Load Life	±[3%+0.05Ω]	40℃, 95%RH, 0.1×power rating, 1.5hrs-on, 30minute, off, 500hrs.
Load Life	±[5%+0.05Ω]	Power rating 1.5hrs. on, 30minutes-off, 500hrs.

Surface Temperature Increase Versus Power Load

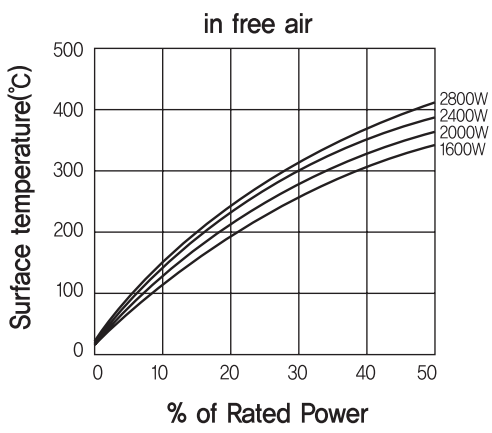

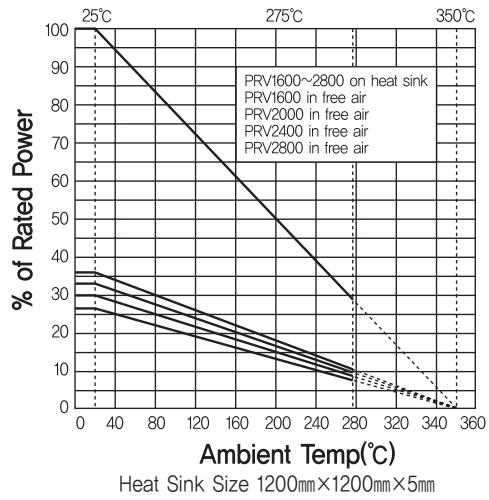

Heat Sink Size 1200㎜×1200㎜×5㎜

Dimensions

Model	Dimensions (mm)					Weight (kg)
	L1±2	L2±2	L3±2	H±1	W±0.5	
PRV 1600	330	315	290	92	60	2.5
PRV 2000	440	425	400	92	60	3.4
PRV 2400	480	465	440	92	60	3.7
PRV 2800	550	535	510	92	60	4.3

Dimensions

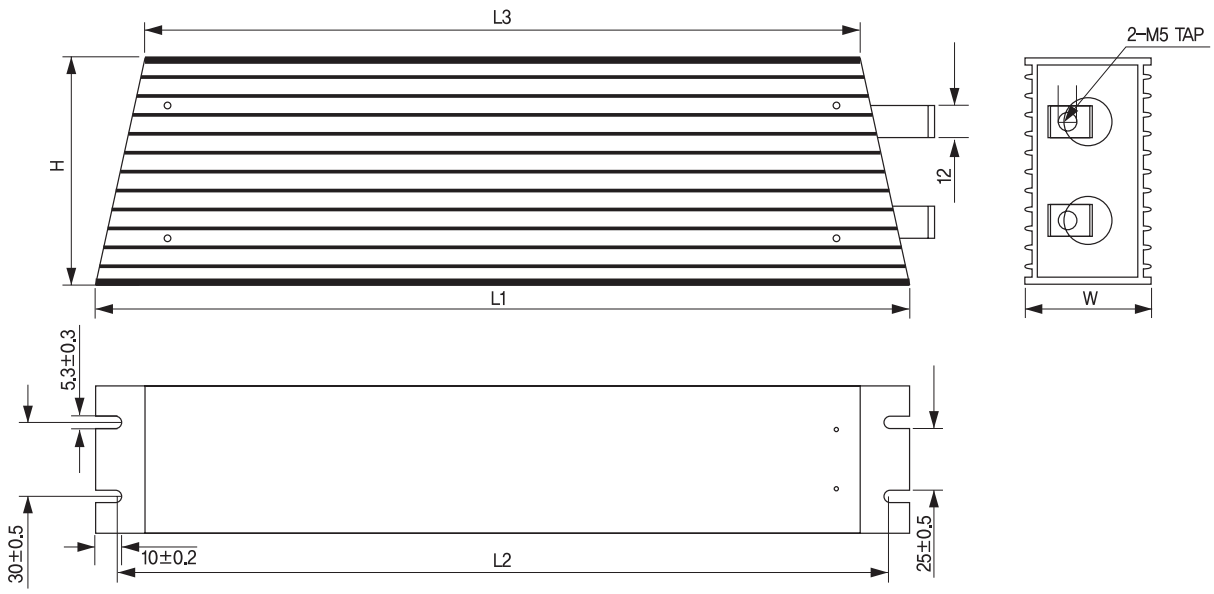

Flying Leads

Model	5.5 ㎟	2 ㎟
PRV 1600	Option	2.5Ω ~
PRV 2000	Option	3.2Ω ~
PRV 2400	Option	4.0Ω ~
PRV 2800	Option	4.5Ω ~

Flying Leads

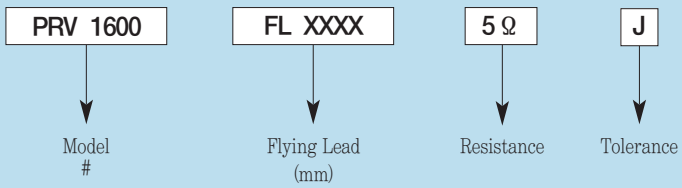

Thermostat options are available for these models. Internal and discreet connection. Please ask DAELIM for more info on this.

大電力形 메탈클레드 卷線抵抗器

Flat-Type Metal-Clad Resistor

General Specifications

Model	Wattage Rating on Heat Sink	Resistance Range (Ω)	Tolerance
PRF 50	50W	1~420	±0.5%(D) ±1.0%(F) ±2.0%(G) ±5.0%(J) ±10%(K)
PRF 100	100W	1~1.1K	
PRF 150	150W	1~1.7K	
PRF 200	200W	1~2.2K	
PRF 250	250W	1~2.7K	
PRF 300	300W	1~3.5K	
PRF 400	400W	1~4.0K	
PRF 500	500W	1~5.0K	

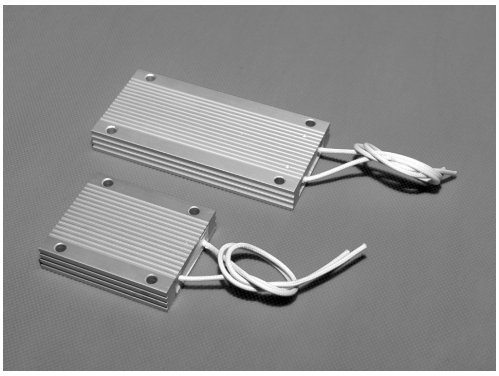

Characteristics

Values in [ ] mean change in Ω after test

Temperature Range		Cement : -55~250℃, Silicone : -55℃~150℃
Insulation Resistance		20MΩ minimum
Dielectric Strength		Available options : AC 1500V, 2500V, 3000V, 4500V (Max. leakage current : 2mA)
Temp. Coefficient		±260ppm/℃ maximum
Short Time Overload	±[1%+0.05Ω]	50W : 5×Power rating 5 secs., 100W-500W : 5×Power rating 5 secs.
Moisture Resistance	±[2%+0.05Ω]	40℃, 95%RH, DC100V case to terminal(500hrs.)
Thermal Shock	±[1%+0.05Ω]	Power rating-30 minutes, -25℃, 15minutes
Vibration	±[1%+0.05Ω]	10Hz-55Hz-10Hz (1minute), 2hrs. each direction
Moisture Load Life	±[2%+0.05Ω]	40℃, 95%RH, 0.1×Power rating, 1.5hrs-on, 30minute, off, 500hrs.
Load Life	±[3%+0.05Ω]	Power rating 1.5hrs. on, 30minutes-off, 500hrs.

Surface Temperature Increase Versus Power Load

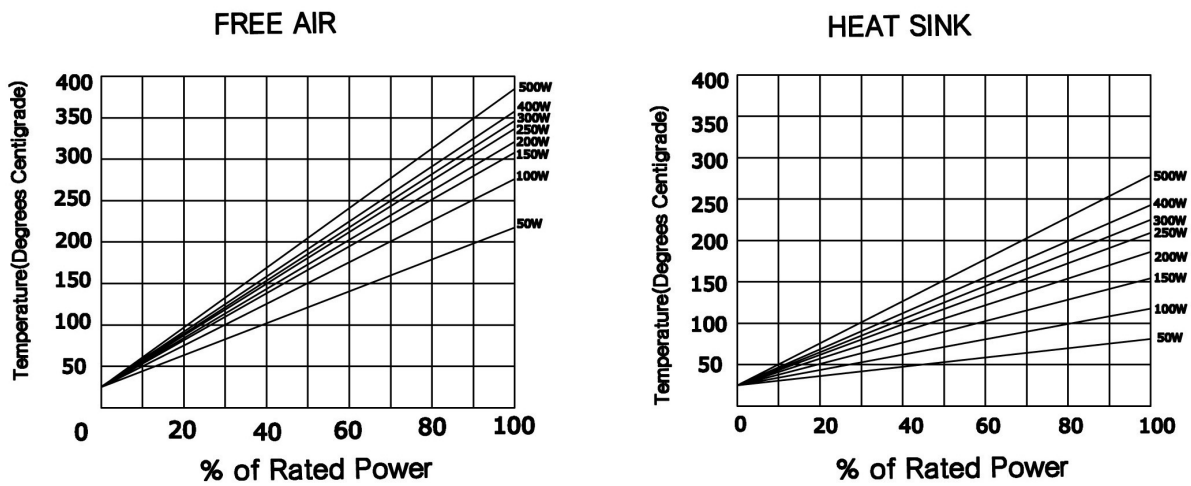

Dimensions

Model	Dimensions (mm)				Weight (g)
	L1±1	L2±0.3	W1±0.3	W2±0.3	
PRF 50	70	50	60	50	115
PRF 100	90	70	80	70	165
PRF 150	120	100	80	70	215
PRF 200	150	130	80	70	260
PRF 250	180	160	80	70	310
PRF 300	210	190	80	70	355
PRF 400	270	250	80	70	455
PRF 500	330	310	80	70	555

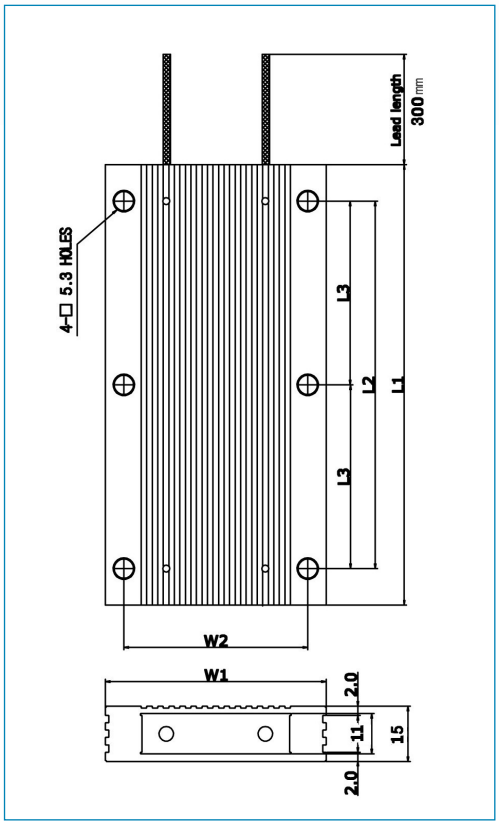

Flying Leads

Model	2㎟	1.25㎟	UL 3512 AWG 16
PRF 50~150	×	1Ω ~	×
PRF 200	1~4Ω	4.1Ω ~	×
PRF 250	1~5Ω	5.1Ω ~	×
PRF 300	1~6Ω	6.1Ω ~	×
PRF 400	1~8Ω	8.1Ω ~	×
PRF 500	1~10Ω	10.1Ω ~	×

Derating Curve and Ordering Procedure Example

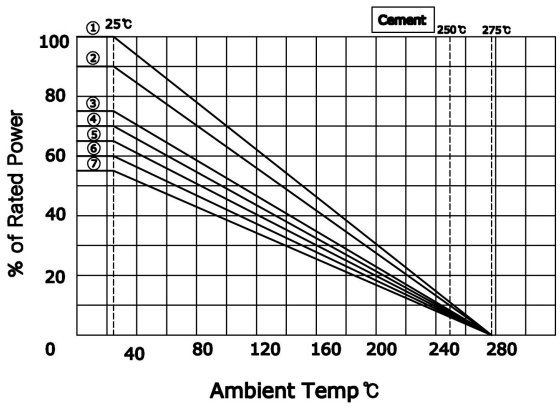

Heat Sink size : PRF 100~200 = 200 X 200 X 3㎜
PRF 250~400 = 400 X 400 X 3㎜
PRF 500 = 600 X 600 X 3㎜

① PRF 100~500 on heat sink
② PRF 100 in free air
③ PRF 150 in free air
④ PRF 200 in free air
⑤ PRF 250~300 in free air
⑥ PRF 400 in free air
⑦ PRF 500 in free air

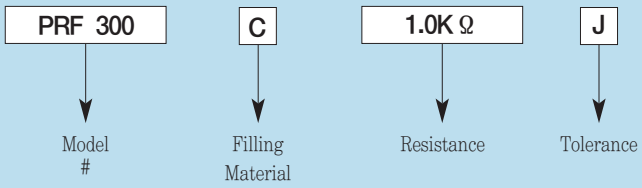

C=Cement(standard)
S=Silicone
Filling Material : C=Cement, S=Silicone

大電力形 메탈클레드 卷線抵抗器

High Power Type Metal-Clad Wire-Wound Resistor(MCR 300~1200W)

(실용신안등록 제20-0454290호, 의장등록 제30-0580233호)

General Specifications

Model	Rated Power	Resistance Range (Ω)		Resistance Tolerance
		Inductive	Non-Inductive	
MCR 300	300W	0.1-500	0.1-200	F(±1%) G(±2%) J(±5%)
MCR 400	400W	0.1-600	0.1-300	
MCR 500	500W	0.1-600	0.1-300	
MCR 600	600W	0.1-800	0.1-350	
MCR 800	800W	0.1-1.0K	0.1-500	
MCR 1000	1000W	0.1-1.5K	0.1-700	
MCR 1200	1200W	0.1-2.0K	0.1-1.0K	

Characteristics

Temperature Range	-55℃ ~ 200℃
Insulation Resistance	Over 100MΩ
Dielectric Strength	AC 2500V / 1Min
Temp. Coefficient	±260 ppm/℃ max

Power Derating Curve

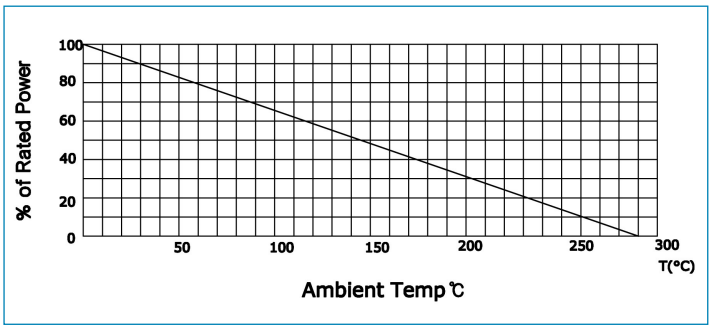

Dimensions

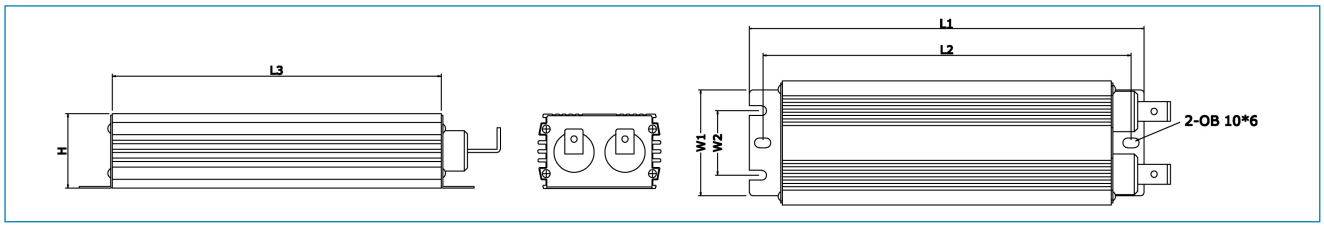

Flying Leads

Model	L1±1.0	L2±1.0	L3±1.0	W1±0.5	W2±0.5	H±0.5
MCR - 300	190	175	150	75	41	45
MCR - 400	220	205	180	75	41	45
MCR - 500	240	225	200	75	41	45
MCR - 600	260	245	220	75	41	45
MCR - 800	300	285	260	75	41	45
MCR - 1000	340	325	300	75	41	45
MCR - 1200	400	385	360	75	41	45

Ordering Procedure Example

MCR	300W	N	100 Ω	J
↓	↓	↓	↓	↓
Model #	Rated Wattage	For Non-Inductive	Resistance	Tolerance

DHL, DHB, DHT and DAELIM HEATER

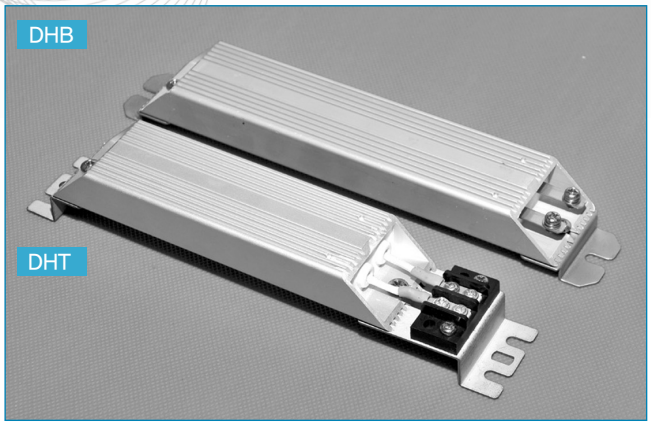

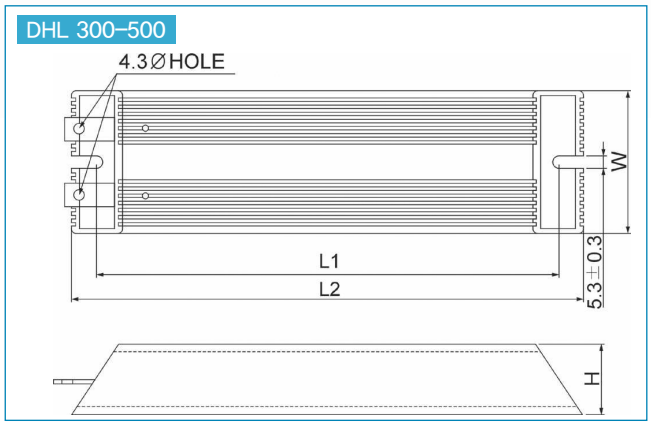

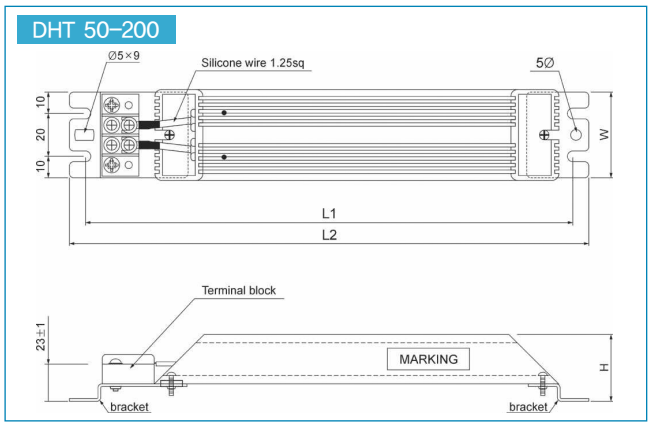

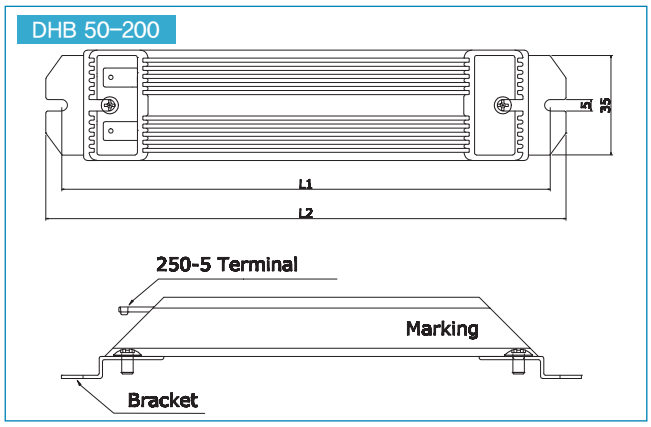

General Specifications

Model	L1±2	L2±2	W±0.5	H±1	Rated Power(W)	Rated Voltage(V)	Resistance Range(Ω)
DHT 50	151	135	41	30	50	AC 110 – AC 380	$P=\frac{V^2}{R}(+10\%)$
DHB 50	127	110	41	30	50		
DHT 60	201	185	41	30	60		
DHB 60	177	160	41	30	60		
DHT 80	201	185	41	30	80		
DHB 80	177	160	41	30	80		
DHT 100	217	200	41	30	100		
DHB 100	192	175	41	30	100		
DHT 120	234	217	41	30	120		
DHB 120	209	192	41	30	120		
DHT 150	262	245	41	30	150		
DHB 150	237	220	41	30	150		
DHT 200	280	263	41	30	200		
DHB 200	255	238	41	30	200		
DHL 300	215	196	60	30	300		
DHL 400	265	246	60	30	400		
DHL 500	335	316	60	30	500		

電力形 卷線抵抗器

Non-Flammable Wire Wound Fixed Resistors

General Specifications

Model	Power Rating(W)	Resistance Range (Ω)		Tolerance
		Standard	S type	
RWH RWD RWA	15	1-5K	3K	1Ω ≤ R J[±5%] 1Ω > R K[±10%]
	20	1-20K	4K	
	30	1.5-30K	4K	
	40	2-40K	6K	
	50	2-50K	8K	
	60	1.5-60K	12K	
	80	2-80K	15K	
	100	2.5-100K	20K	
	120	3-120K	25K	
	150	4-150K	30K	
	200	5-200K	40K	
	300	8-200K	60K	
	400	10-300K	80K	
	500	10-400K	90K	
	600	10-500K	100K	
	800	10-600K	110K	
	1000	10-900K	120K	
	1200	10-1000K	130K	
	1500	10-1100K	140K	
	2000	10-1200K	150K	

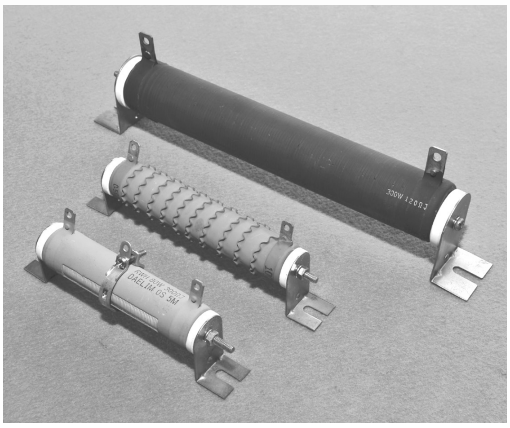

Characteristics

Values in [ ] mean change in Ω after test

Temperature Coefficient		±200ppm/℃ max.
Power Rating Load	±[1%+0.05Ω]	[JIS-C-5202, 5-4] 350℃ max.
Short Time Overload	±[2%+0.05Ω]	1000% rated power 5 secs
Insulation Resistance		100MΩ min. DC 500V
Dielectric Withstanding Voltage		RWA : AC 1500V 1 minutes, RWH : AC 3000V 1 minutes
Terminal Strength		5~20W : 4.5kgf, H20~40W : 6kgf, 60~200W : 8kgf, 300~400W : 10kgf-30secs
Resistors Strength		5~40W : 20kgf, 60~400W : 30kgf-30secs
Vibration		Mount : RWH 1.5mm 10~55Hz/1min.X,Y,Z 2 hours each direction
Solderability	75% coverage MIN.	270℃ 5 secs
Heat Resistance		350℃ 2 hours
Thermal Shock	±[2%+0.05Ω]	Power rating load 30min., -55℃ 15min
Humidity (Steady state)	±[2%+0.05Ω , 10MΩ MIN.]	40℃, 95%RH, DC100V 500 hours
Moisture Load Life	±[2%+0.05Ω]	0.1×power rating, 90 min. on, 30 min off, 40℃, 95% RH, 500 hours
Load Life	±[5%+0.05Ω]	Power rating, 90 min. on, 30 min off, 500hours
Flame Retardant	no evidence of flaming or arcing	100~600% rated power load

※NOTE : Applied voltage : AC RMS voltage

Derating Curve and Ordering Procedure Example

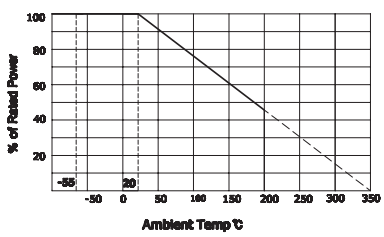

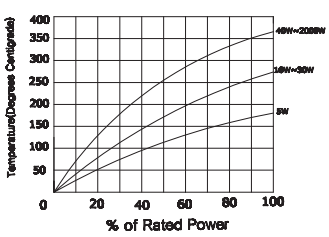

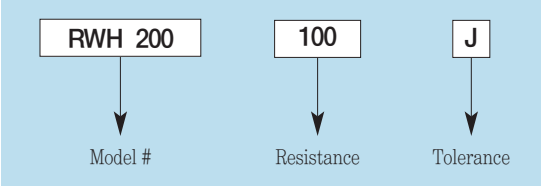

When loading for a short time with a cycle of over 30 minutes, the load can be more than the rated power. To avoid short circuits between cables, do not exceed the maximum capable voltage between terminals.

Short Time Over Load Rating

Load time(sec)	1	2	3	4	5	10	30	60	180	300	600	900
Max Rated Load(%)	2600	2000	1600	1400	1300	1000	600	450	200	150	120	110

Dimension(mm)

RWD type

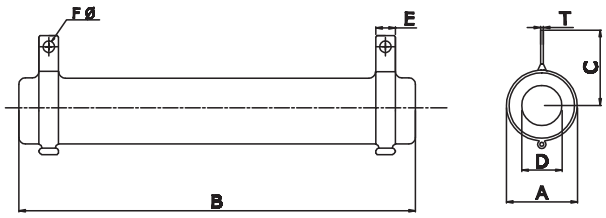

RWA type

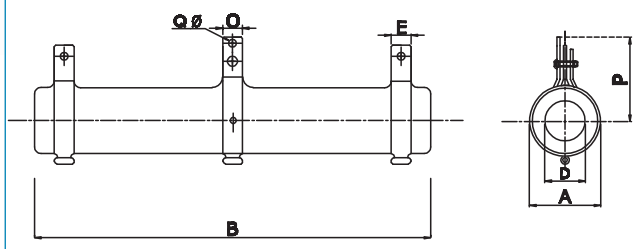

RWH type

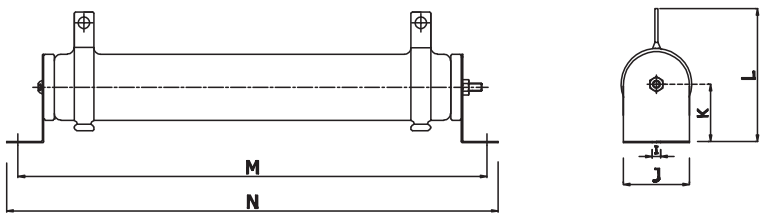

Model	Power Rating(W)	Dimension[mm] ±2															
		A	B	C	D	E	F	I	J	K	L	M	N	P	Q	O	T
RWH RWD RWA	15	17	50	20	8.5	5	2.8	4.2	18	22	41	71	86	26	3.5	6	0.5
	20	17	50	20	8.5	5	2.8	4.2	18	22	41	71	86	26	3.5	6	0.5
	30	17	75	20	8.5	5	2.8	4.2	18	22	41	99	110	26	3.5	6	0.5
	40	17	90	20	8.5	5	2.8	4.2	18	22	41	115	124	26	3.5	6	0.5
	50	28	75	33	14	8	4	6	26	30	62	110	133	35	4.2	8.5	1.4
	60	28	90	33	14	8	4	6	26	30	62	128	148	35	4.2	8.5	1.4
	80	28	115	33	14	8	4	6	26	30	62	150	173	35	4.2	8.5	1.4
	100	28	140	33	14	8	4	6	26	30	62	175	198	35	4.2	8.5	1.4
	120	28	165	33	14	8	4	6	26	30	62	200	221	35	4.2	8.5	1.4
	150	28	195	33	14	8	4	6	26	30	62	230	253	35	4.2	8.5	1.4
	200	28	254	33	14	8	4	6	26	30	62	290	313	35	4.2	8.5	1.4
	300	42	254	45	24	12	5.5	6.5	40	40	86	300	330	52	5	12	1.6
	400	42	330	45	24	12	5.5	6.5	40	40	86	380	407	52	5	12	1.6
	500	52	330	57	29	15	9	6.5	54	41	99	345	362	53	5	12	2.2
	600	52	330	57	29	15	9	6.5	54	41	99	375	392	53	5	12	2.2
	800	65	330	65	46	20	10	10	65	59	126	385	404	72	10	20	2.2
	1000	77	330	71	47	20	10	10	75	63	130	388	408	80	10	20	2.2
	1200	77	330	71	47	20	10	10	75	63	130	388	408	80	10	20	2.2
	1500	77	420	71	47	20	10	10	75	63	130	478	498	80	10	20	2.2
	2000	77	500	71	47	20	10	10	75	63	130	558	578	80	10	20	2.2

Percentage Power Decrease in Grouped Applications

Interval	State	2 EA	3 EA	4 EA	5 EA	6 EA	7 EA	8 EA	9 EA	10 EA	11 EA	12 EA
40mm	Open	63	56	51	48	45	43	40	38	36	34	32
	Close	54	47	43	41	38	36	34	32	31	29	27
45mm	Open	70	64	60	56	53	50	48	46	44	42	40
	Close	60	54	51	47	45	42	41	39	37	36	34
50mm	Open	73	68	64	60	58	56	55	54	52	50	49
	Close	62	58	54	51	49	47	46	45	44	43	42
55mm	Open	77	70	67	64	63	60	59	58	57	56	56
	Close	65	59	57	54	53	51	50	49	48	47	47
75mm	Open	82	76	72	68	66	65	64	63	62	61	60
	Close	70	64	61	58	56	55	54	53	52	51	50

18 코일저항기
Edge Wound Resistor

General Specifications

TYPE	Power rating		Resistance Range (Ω)		Resistance Tolerance
	With Fan	In Free Air	EWS	EWF	
EWS/EWF 400	600W	400W	0.02~0.25	0.26~3.3	±5%(J) ±10%(K)
EWS/EWF 600	1000W	600W	0.029~0.28	0.39~4.95	
EWS/EWF 800	1.3KW	800W	0.039~0.50	0.51~6.6	
EWS/EWF 1000	1.6KW	1KW	0.051~0.63	0.64~8.2	
EWS/EWF 1200	2KW	1.2KW	0.061~0.75	0.76~9.9	
EWS/EWF 1400	2.3KW	1.4KW	0.071~0.88	0.89~11.5	
EWS/EWF 1600	2.6KW	1.6KW	0.081~1.00	1.10~13.2	

• EWS : SUS304 Resistance wire • EWF : FCHW Resistance wire

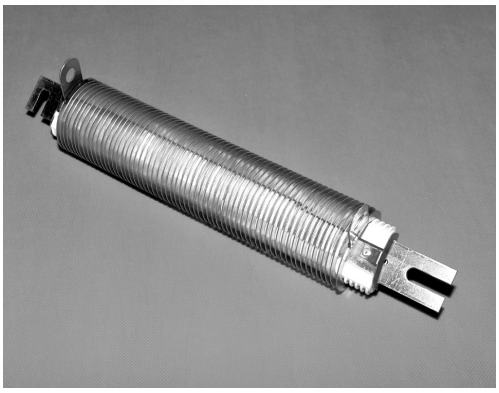

Characteristics

Temperature Range	−55℃ ~ 375℃
Insulation Resistance	100MΩ min.
Dielectric Strength	AC 2000V for 1 minute

% Increase in Rated Current

% ED	5%	10%	15%	40%	60%
Increased Rated Current	2.5×Current Rating	1.8×Current Rating	1.6×Current Rating	1.25×Current Rating	1.15×Current Rating

Rated Currents by Models and Ohmic Values

Resistance (Ω)							RATED CURRENT	D#
EWS/EWF 400	EWS/EWF 600	EWS/EWF 800	EWS/EWF 1000	EWS/EWF 1200	EWS/EWF 1400	EWS/EWF 1600		
0.02	0.029	0.039	0.051	0.061	0.071	0.081	140	69
0.023	0.035	0.047	0.059	0.071	0.082	0.094	130	65
0.027	0.041	0.055	0.069	0.083	0.097	0.111	120	65
0.033	0.049	0.066	0.082	0.099	0.115	0.132	110	72
0.04	0.06	0.08	0.1	0.12	0.14	0.16	100	72
0.044	0.066	0.088	0.110	0.132	0.155	0.177	95	72
0.049	0.074	0.098	0.123	0.148	0.172	0.197	90	72
0.055	0.083	0.110	0.138	0.166	0.193	0.221	85	71
0.062	0.093	0.125	0.156	0.187	0.218	0.25	80	67
0.071	0.106	0.142	0.177	0.213	0.248	0.284	75	65
0.081	0.122	0.163	0.204	0.244	0.285	0.326	70	69
0.094	0.142	0.189	0.236	0.284	0.331	0.378	65	65
0.111	0.166	0.222	0.277	0.333	0.388	0.444	60	67
0.132	0.198	0.264	0.330	0.396	0.462	0.528	55	71
0.16	0.24	0.32	0.4	0.48	0.56	0.64	50	71
0.197	0.296	0.395	0.493	0.592	0.691	0.790	45	67
0.25	0.375	0.5	0.625	0.75	0.875	1	40	67
0.326	0.489	0.653	0.816	0.979	1.142	1.306	35	67
0.444	0.666	0.888	1.111	1.333	1.555	1.777	30	65
0.64	0.96	1.28	1.6	1.92	2.24	2.56	25	61
1	1.5	2	2.5	3	3.5	4	20	55

Dimension

Model	Dimensions in (mm)		
	L1	L2	C
EWS/EWF 400	240	205	18~30
EWS/EWF 600	310	275	
EWS/EWF 800	380	345	
EWS/EWF 1000	450	415	
EWS/EWF 1200	520	485	
EWS/EWF 1400	590	555	
EWS/EWF 1600	660	625	

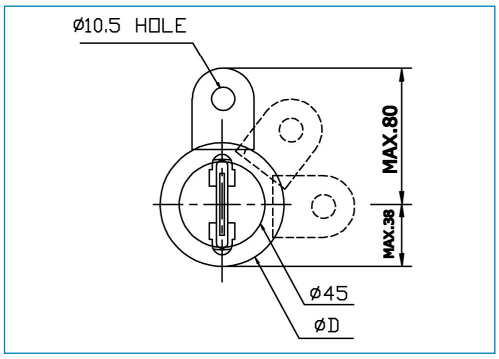

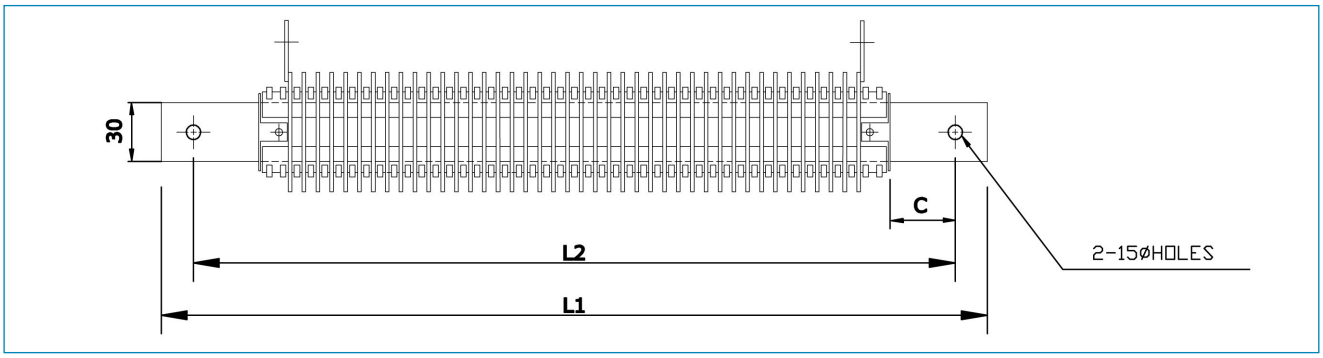

Surface Temperature Versus Power Load and Ordering Procedure Example

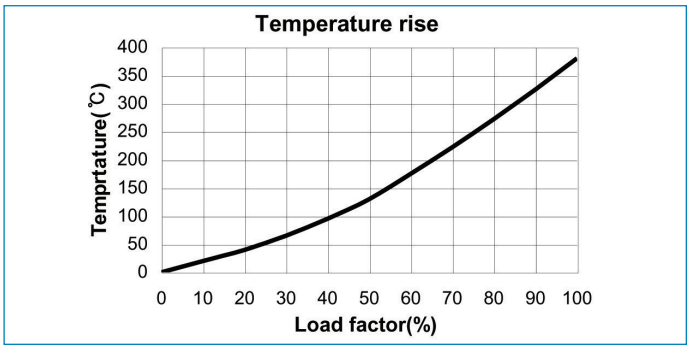

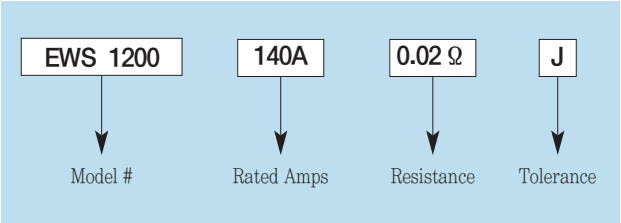

When designing your system specifications, or if you have any questions, contact the DAELIM design team for more information.

Derating Curves

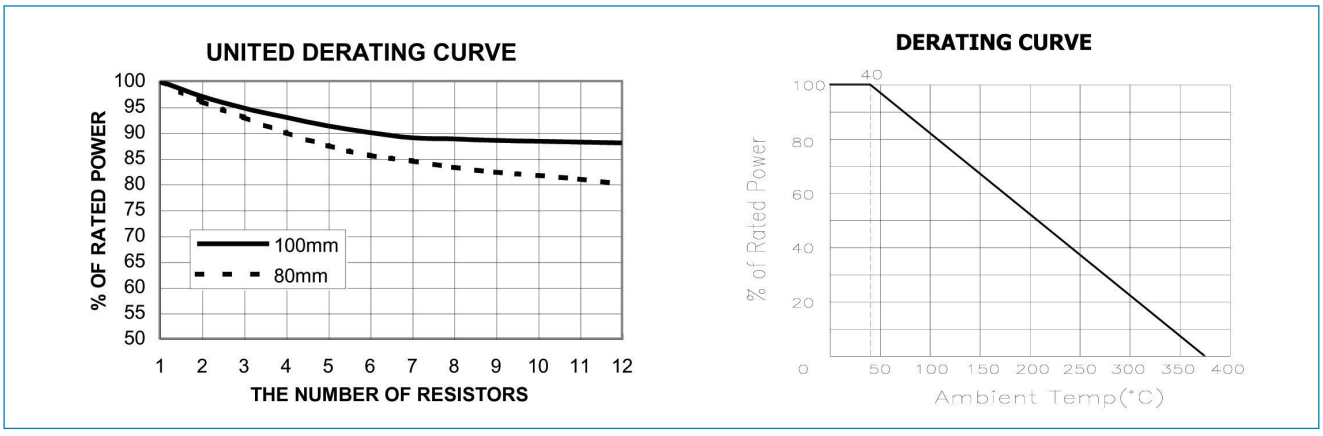

DBR

Dynamic Braking Resistor

The DBR series of power, metal clad, wire wound resistors are designed for use in power inverters. The basis for these models is an PRH or PRV resistor surrounded by a metal case, which conforms to international safety specifications. The steel case is powder coated and baked for durability.

Specification

Model	Rated Wattage	Resistance Range (Ω) Inductive	Resistance Tolerance
MCRD-SET2000	2KW	0.5-240	±1.0(F) ±2.0(G) ±5.0(J) ±10(K)
MCRD-SET2400	2.4KW	0.5-480	
MCRD-SET3000	3KW	0.5-720	
MCRD-SET3600	3.6KW	0.5-720	
MCRD-SET4000	4KW	0.5-720	
MCRD-SET4800	4.8KW	0.5-720	
MCRD-SET5000	5KW	0.5-720	
MCRD-SET6000	6KW	0.5-720	
MCRD-SET7200	7.2KW	0.5-720	

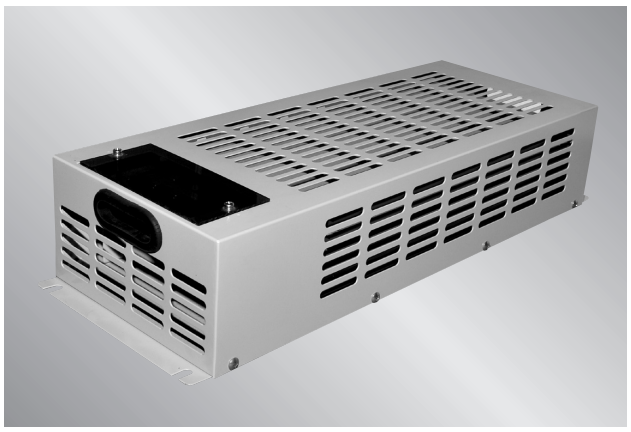

Dimensions & Ordering Procedure Example

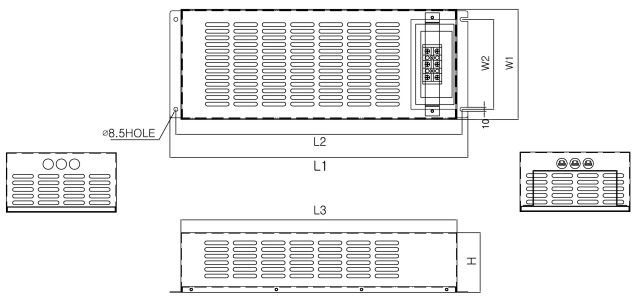

MCRD 7200 | SET | 7.2KW | 27 Ω | J | T145

Model # | Type | Rated power | Resistance | Tolerance | Temperature Sensor

• T145 : 145℃ • T200 : 200℃ • – : Notavailabel

T145	145℃
T200	200℃
–	Notavailabel

Dimension

Model	Dimensions (mm) ※( )small-type					
	L1±1.5	L2±1.5	L3±2	W1±1.5	W2±2	H±2
MCRD-SET2000	630(480)	605(458)	584(435)	230	190	126
MCRD-SET2400	630(480)	605(458)	584(435)	230	190	126
MCRD-SET3000	630(480)	605(458)	584(435)	230	190	126
MCRD-SET3600	630(480)	605(458)	584(435)	230	190	126
MCRD-SET4000	630(480)	605(458)	584(435)	230	190	126
MCRD-SET4800	630(480)	605(458)	584(435)	230	190	126
MCRD-SET6000	630	605	584	230	190	126
MCRD-SET7200	630	605	584	230	190	126

Characteristics

Values in [ ] mean change in Ω after test

Temperature Range		-55℃ ~ 200℃
Insulation Resistance		20MΩ min.
Dielectric Strength		Available options : AC1500V, 2500V, Leakage Current : 5mA
Temp. Coefficient		±260ppm/℃ max.
Short Time Overload	±[2%+0.05Ω]	10Xwattage rating-5seconds
Moisture Resistance	±[3%+0.05Ω]	40℃, 95% RH, DC100V case to terminal (500hrs.)
Thermal Shock	±[2%+0.05Ω]	wattage rating 30min., -25℃, 15 minutes

The DBR series of high power, metal clad, wire wound resistors are designed for use in high power inverters. The basis for these models are sets of PRV resistor surrounded by a metal case, which conforms to international safety specifications. The steel case is powder coated and baked for durability.

Specification

Model	Wattage Rating in Free Air	Resistance Range (Ω)	Resistance Tolerance
		Inductive	
MCRD-SEF8000	8.0KW	0.1-340	
MCRD-SEF9600	9.6KW	0.1-340	±1.0(F)
MCRD-SEF10000	10KW	0.1-340	±2.0(G)
MCRD-SEF12000	12KW	0.1-420	±5.0(J)
MCRD-SEF14000	14KW	0.1-560	±10(K)
MCRD-SEF15000	15KW	0.1-560	

Dimensions & Ordering Procedure Example

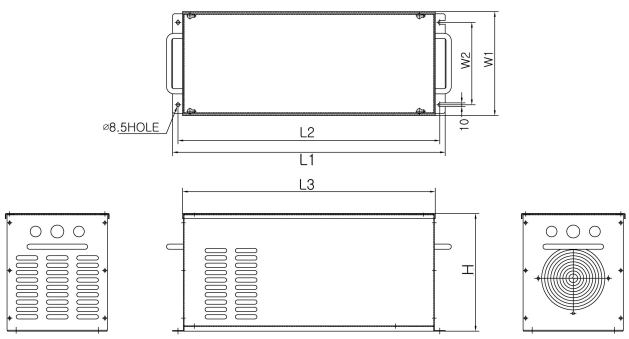

MCRD 9600 | SEF | 9.6KW | 27 Ω | J | T145

Model # | Type | Rated power | Resistance | Tolerance | Temperature Sensor

• T145 : 145℃ • T200 : 200℃ • – : Notavailabel
• (F) FAN : AC110V, AC220V

SEF 110	AC 110V	T145	145℃
SEF 220	AC 220V	T200	200℃
SET –	Notavailabel	–	Notavailabel

Dimension

Model	Dimensions (mm) ※( )small-type					
	L1±5	L2±5	L3±3	W1±2	W2±2	H±2
MCRD-SEF8000	630(480)	605(458)	584(435)	230	190	258
MCRD-SEF9600	630(480)	605(458)	584(435)	230	190	258
MCRD-SEF10000	630	605	584	230	190	258
MCRD-SEF12000	630	605	584	230	190	258
MCRD-SEF14000	630	605	584	230	190	258
MCRD-SEF15000	630	605	584	230	190	258

Characteristics

Values in [ ] mean change in Ω after test

Temperature Range		-55℃ ~ 200℃
Insulation Resistance		20MΩ min.
Dielectric Strength		Available options : AC1500V, 2500V, Leakage Current : 5mA
Temp. Coefficient		±260ppm/℃ max.
Short Time Overload	±[2%+0.05Ω]	10Xwattage rating-5seconds
Moisture Resistance	±[3%+0.05Ω]	40℃, 95% RH, DC100V case to terminal (500hrs.)
Thermal Shock	±[2%+0.05Ω]	wattage rating 30min., 25℃, 15 minutes

DBR

Dynamic Braking Resistor

The DBR series of high power, metal clad, wire wound resistors are designed for use in high power inverters. The basis for these models are sets of PRV resistor surrounded by a metal case, which conforms to international safety specifications. The steel case is powder coated and baked for durability.

Specification

Model	Wattage Rating in Free Air	Resistance Range (Ω)	Resistance Tolerance
		Inductive	
MCRD-SEF15000	15KW	0.1-340	±1.0(F) ±2.0(G) ±5.0(J) ±10(K)
MCRD-SEF16000	16KW	0.1-340	
MCRD-SEF17000	17KW	0.1-340	
MCRD-SEF18000	18KW	0.1-420	
MCRD-SEF19000	19KW	0.1-560	

Dimensions & Ordering Procedure Example

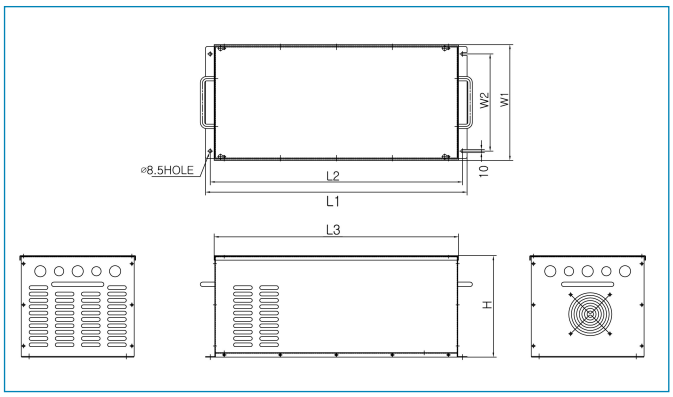

MCRD 15000	SEF	15KW	27 Ω	J	T145
Model #	Type	Rated power	Resistance	Tolerance	Temperature Sensor

• T145 : 145℃ • T200 : 200℃ • – : Notavailabel
• (F) FAN : AC110V, AC220V

SEF 110	AC 110V	T145	145℃
SEF 220	AC 220V	T200	200℃
SET –	Notavailabel	–	Notavailabel

Dimension

Model	Dimensions (mm)					
	L1±5	L2±5	L3±3	W1±2	W2±2	H±2
MCRD-SEF15000	630	605	584	310	260	271
MCRD-SEF16000	630	605	584	310	260	271
MCRD-SEF17000	630	605	584	310	260	271
MCRD-SEF18000	630	605	584	310	260	271
MCRD-SEF19000	630	605	584	310	260	271

Characteristics

Values in [ ] mean change in Ω after test

Temperature Range		-55℃ ~ 200℃
Insulation Resistance		20MΩ min.
Dielectric Strength		Available options : AC1500V, 2500V, Leakage Current : 5mA
Temp. Coefficient		±260ppm/℃ max.
Short Time Overload	±[2%+0.05Ω]	10Xwattage rating-5seconds
Moisture Resistance	±[3%+0.05Ω]	40℃, 95% RH, DC100V case to terminal (500hrs.)
Thermal Shock	±[2%+0.05Ω]	wattage rating 30min., 25℃, 15 minutes

The DBR series of high power, metal clad, wire wound resistors are designed for use in high power inverters. The basis for these models are sets of PRV resistor surrounded by a metal case, which conforms to international safety specifications. The steel case is powder coated and baked for durability.

Specification

Model	Wattage Rating in Free Air	Resistance Range (Ω)	Resistance Tolerance
		Inductive	
MCRD-SEF20000	20KW	0.1-850	
MCRD-SEF22000	22KW	0.1-850	±1.0(F)
MCRD-SEF24000	24KW	0.1-900	±2.0(G)
MCRD-SEF25000	25KW	0.1-950	±5.0(J)
MCRD-SEF28000	28KW	0.1-950	±10(K)

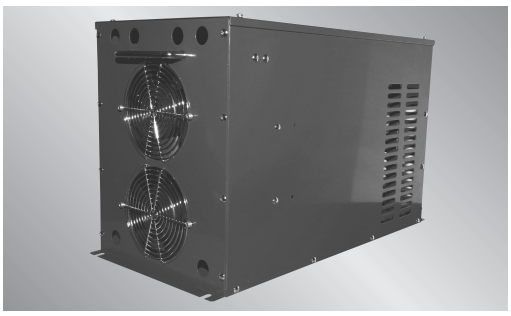

Dimensions & Ordering Procedure Example

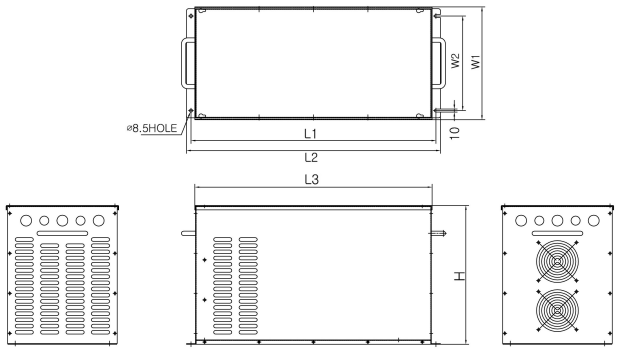

MCRD 28000 | SEF | 28KW | 27 Ω | J | T145

Model # | Type | Rated power | Resistance | Tolerance | Temperature Sensor

• T145 : 145℃ • T200 : 200℃ • – : Notavailabel
• (F) FAN : AC110V, AC220V

SEF 110	AC 110V
SEF 220	AC 220V
SET –	Notavailabel

T145	145℃
T200	200℃
–	Notavailabel

Dimension

Model	Dimensions (mm)					
	L1±5	L2±5	L3±3	W1±2	W2±2	H±2
MCRD-SEF20000	630	605	584	310	260	381
MCRD-SEF22000	630	605	584	310	260	381
MCRD-SEF24000	630	605	584	310	260	381
MCRD-SEF25000	630	605	584	310	260	381
MCRD-SEF28000	630	605	584	310	260	381

Characteristics

Values in [ ] mean change in Ω after test

Temperature Range		-55℃ ~ 200℃
Insulation Resistance		20MΩ min.
Dielectric Strength		Available options : AC1500V, 2500V, Leakage Current : 5mA
Temp. Coefficient		±260ppm/℃ max.
Short Time Overload	±[2%+0.05Ω]	10Xwattage rating-5seconds
Moisture Resistance	±[3%+0.05Ω]	40℃, 95% RH, DC100V case to terminal (500hrs.)
Thermal Shock	±[2%+0.05Ω]	wattage rating 30min., 25℃, 15 minutes

24 부하 저항기
LOAD BANK

| 개 요

발전기나 인버터, UPS, 산업용 전기기기등의 실부하 시험설비로서 역률이 1인 저항부하와 0.8 또는 기타의 역률이 소요되는 R-L부하로 나눌 수 있다.
용량별 TAP을 인출하여 단계별 용량선택이 자유롭고, 자동 또는 수동으로 시험할 수 있는 설비이다.

It is an actual loading test equipment for generators, inverters, UPSs and industrial devices, which can be divided into a resistive load, which the power-factor is 1, and a R-L load that requires 0.8 or other power-factor.
It is an equipment that can freely test automatically or manually by drawing taps by capacity.

| 구 조

저항기의 구조는 상부에는 저항기를 하부에는 FAN을 설치하여 통풍이 원활하게 되는 구조로 되어 있다.
It has a structure that installs resistors and fans on the upper and the lower respectively to ventilate efficiently.

저항소자는 연속사용에 의한 부하용량의 변화가 적은 특성을 갖도록 구성되어 있다. 또한, 고객의 요구에 의한 다기능의 System 구성이 가능하다.
The resistive elements are constructed to have a characteristic that the change of load capacity caused by using continuously is small. In addition, a system with multi-function can be constructed according to a customer's demand.

| 고객께서 주문 또는 상담시 필요한 설계 DATA

1. **정 격 용 량** : 부하의 용량을 의미한다.
2. **용량의 분배** : 부하를 한꺼번에 인가할 것인지, 혹은 분배할 것인지 결정한다.
3. **정 격 전 압** : 부하에 걸리는 전압을 의미한다.
4. **설 치 장 소** : 옥내 또는 옥외

크레인 저항기
CRANE RESISTOR

| 개 요

크레인의 기동 및 속도조정에 이용되는 것으로써 크레인의 종류, 제어 방식과 용도에 따라 아래와 같이 분류될 수 있다.

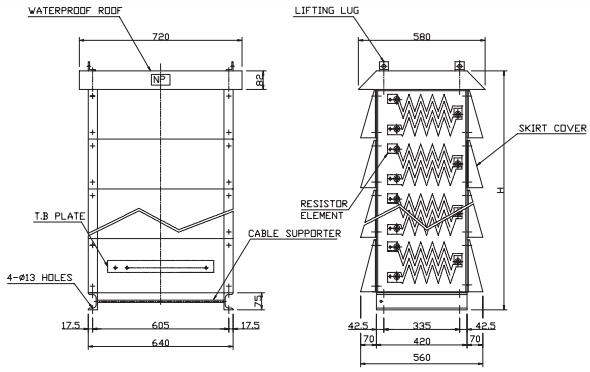

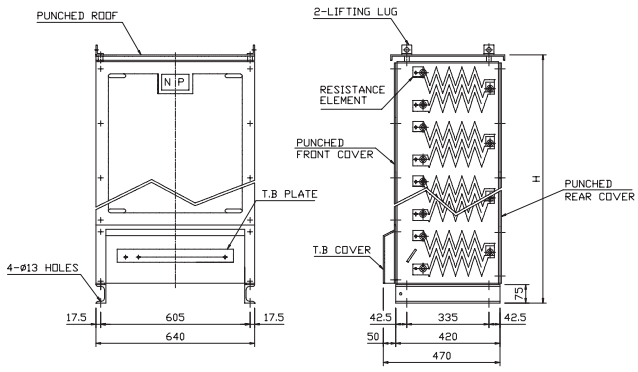

▲ 옥외용 OUT-DOOR

FRAMES	1F	2F	3F	4F	5F	6F
H(mm)	377	577	777	977	1177	1377

▲ 옥내용 IN-DOOR

FRAMES	1F	2F	3F	4F	5F	6F
H(mm)	325	525	725	925	1125	1325

| 형식분류

DLE	-	용 도	제어방식	단락단수	-	모타용량	-	사용률(%ED)
대림전자약어		EX) HOIST용	THYRISTOR 방식	4단		100KW 모타		30%ED의 사용률일 경우

DLE-HT4-100-03

OUT-DOOR TYPE

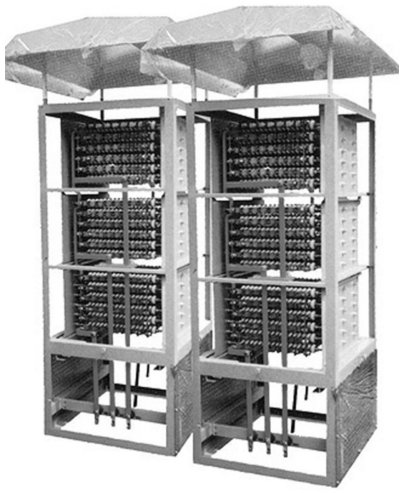

CRANE RESISTOR(600KW)

사용률	
CODE	%ED
01	10
02	20
03	30
중 략	
10	100

크레인 저항기
CRANE RESISTOR

| 형식설명

용 도	제 어 방 식	제 어 단 수	기 동 토 크
H (Hoist)	2' nd (2차 저항 제어)	3, 4, 5	100%
	S (S.C Brake 제어)	4, 5, 6	권하 50% / 권상 135%
	E (E.C Brake 제어)	4, 5, 6	권하 35% / 권상 135%
	D (Dynamic 제어)	3, 4, 5	권하 50% / 권상 120%
	T (Thyristor 제어)	3, 4, 5	권하 40% / 권상 200%
	C (직접 제어)	5, 6, 7	100%
T (Travelling & Traversing)	2' nd (2차 저항 제어)	3, 4, 5	50%
	P (Plugging 제어)	4, 5, 6	정지 40% / 권상 50%
	T (Thyristor 제어)	3, 4, 5	100%
	C (직접 제어)	5, 6, 7	50%

IN-DOOR TYPE

고저항 접지 장치

High Resistance Grounding Equip

| 개 요

접지계통의 순간과전압 보호기능을 유지하면서 돌발적인 정전, 발화위험 및 화재등에 의한 인명피해의 손실과 PLANT의 막대한 손실을 예방하기 위하여 사용한다.

기존의 비접지 방식과 직접접지 방식의 단점을 보완한 것으로써 지락전류를 최소한으로 유지하면서 지락사고에 의한 정전등으로 인한 피해 및 혼란등을 방지하는 방식이다.

즉, 지락사고가 발생하면 경보음등으로 지락사고 발생사실을 알려주면서 지락전류를 최소한으로 유지하면서 지락지점을 찾아 수리할 수 있다.

| 주요기능 및 장점

1. 누전발생시 사전에 감지할 수 있으므로 예방보수가 가능하다.
2. 완전지락 발생시 시스템의 정전없이 CURRENT DETECTOR에 의해 고장점을 찾을 수 있다.
3. ARC가 일어나는 지락시 나타날 수 있는 일시적인 과전압을 감소시킨다.
4. 단선지락사고 발생시에도 시스템을 계속 작동 시켜준다.
5. 정확한 사고 지점을 파악할 수 있도록 지락시의 전류를 PULSING한다.
6. 설치시 여러 가지 방식으로 설치할 수 있다.
   즉, 보편적으로는 DISTRIBUTION SWITCHGEAR나 M.C.C 내부에 설치함이 가장 편리하지만 METALCLAD SWITCHGEAR의 보조 COMPARTMENT, 저전압 SWITCHGEAR내부 등에도 설치할 수 있다.

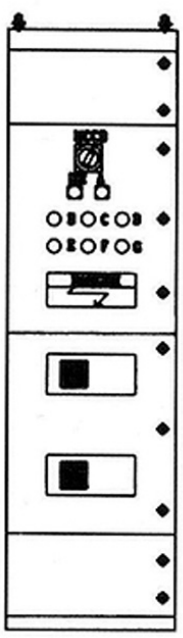

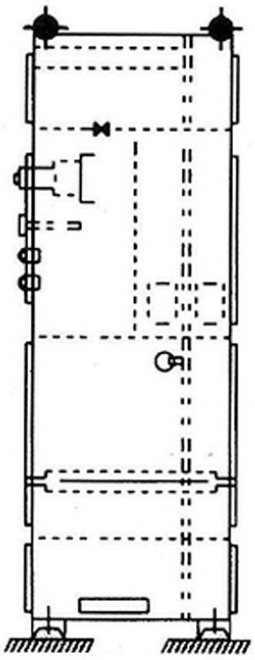

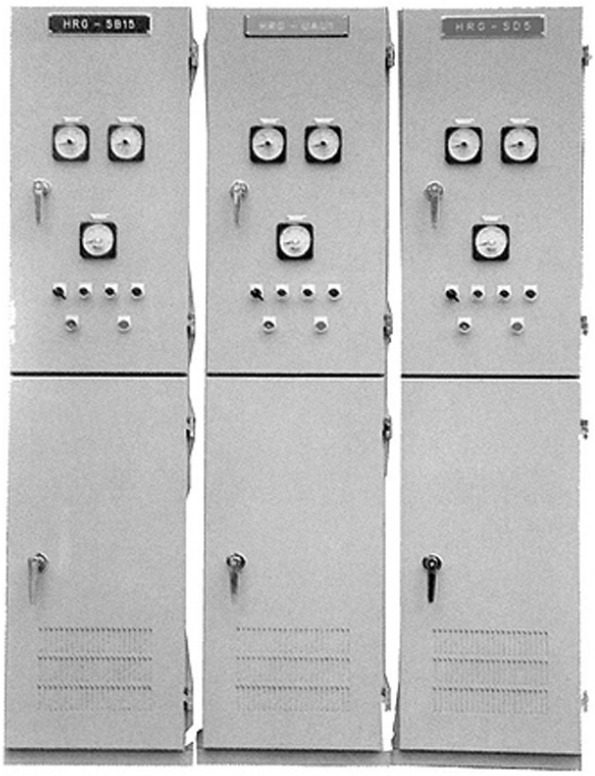

고저항 접지 장치

High Resistance Grounding Equip

| 주요사용장소

전원 공급시스템의 불안정으로 인해 지락사고가 자주 발생하여 공정이 자주 끊어지는 곳이나 정유공장, 화학공장, 제지공장, 섬유공장 등 정전으로 인한 피해가 막대한 곳에서의 사용이 적절하다. 위에서 언급한 것처럼 고저항 접지장치는 지락사고시에도 고저항으로 전류를 최소한으로 하고 경보를 통해 지락사고사실을 알려주는 시스템이므로 위와 같은 회사에서의 사용이 가장 적합니다.

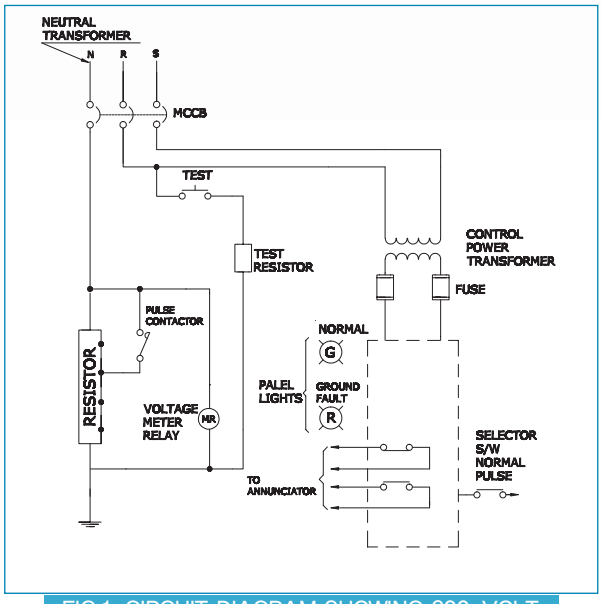

FIG.1. CIRCUIT DIAGRAM SHOWING 600-VOLT MAXIMUM WYE SYSTEMS

| 고객께서 주문 또는 상담시 필요한 설계 DATA

1. 시스템전압 : 220V, 480V, 600V
2. 시스템 TYPE : DELTA 60Hz
   DELTA 50Hz
   WYE 60Hz
   WYE 50Hz

| 주문방법

HGRE - 220 - D6

↓ Model # ↓ system voltage ↓ system type

- SYSTEM VOLTAGE
  - 220 volts 220
  - 480 volts 480
  - 600 volts 600
- SYSTEM TYPE
  - DELTA 60Hz D6
  - DELTA 50Hz D5
  - WYE 60Hz Y6
  - WYE 50Hz Y5

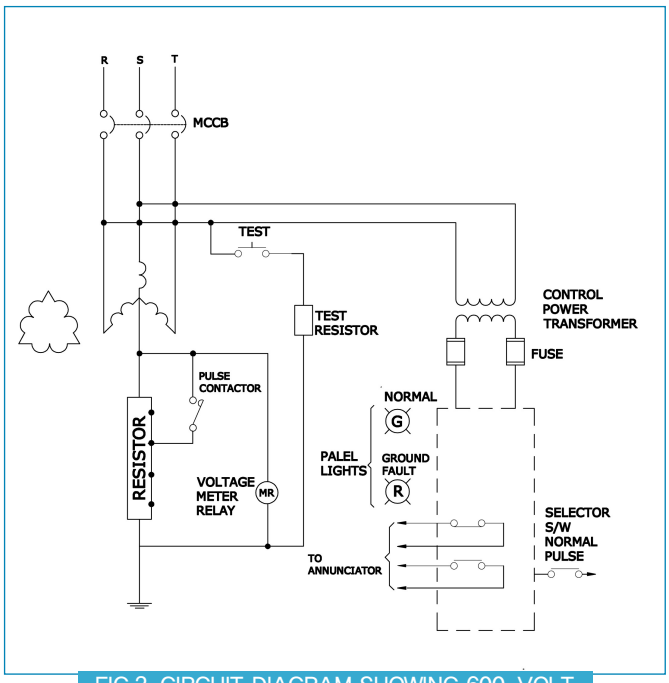

FIG.2. CIRCUIT DIAGRAM SHOWING 600-VOLT MAXIMUM DELTA SYSTEMS

중성점 저항기[N.G.R]

Neutral Grounding Resistor

| 개 요

가장 많이 일반화 되어 있는 경제적인 접지방법으로써 발전기 또는 변압기의 중성점과 대지 사이에 접속되는 방식의 저항기입니다.

| 저항체에 의한 N.G.R의 종류

1. **금속 TYPE의 N.G.R**
   대부분의 N.G.R의 TYPE으로서 저항체의 모양 및 구조에 따라 EDGE-WOUND, GRID-TYPE 등으로 나눌 수 있다.

2. **액체 TYPE의 N.G.R**
   저항체를 수용액으로 조절하는 것으로 습도가 많은 곳이나 대용량에 사용하여 주문시 용량은 일반 NGR과 같다.

| 사용목적

1. 일선(一線) 지락사고시의 이상전압의 발생으로 인한 기기 및 선로의 절연파괴 예방을 위하여 사용한다.
2. CT 및 지락보호계전기(OCGR)를 사용하여 사고 회로의 검출이 쉽고, 사고개소만을 선택차단이 가능하다.
3. 지락시 통신선로(원방감시제어회로, 무선회로, 정보통신 회로 등)의 유도장해를 억제한다.
4. 발전기 지락사고시 부하의 급변을 피하고, 과도안정도를 향상시킨다.

OUT-DOOR TYPE

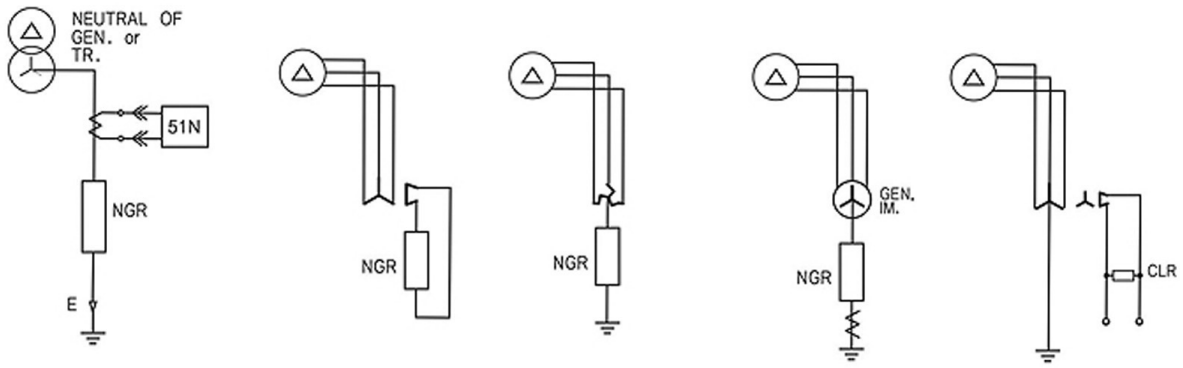

SCHEMATIC DIAGRAM

중성점 저항기[N.G.R]

Neutral Grounding Resistor

고객께서 주문 또는 상담시 필요한 설계 DATA

1. **정 격 전 압** : 계통선로와 변압기 또는 발전기의 중성점에 걸리는 전압을 의미한다.
즉, 상전압을 의미하는 것으로써 고객께서 제시한 DATA가 선간전압일 경우 선간전압의 $1/\sqrt{3}$ 을 적용한다.

2. **정 격 전 류** : 지락사고가 발생했을 때 정격전압이 인가된 상태에서 변압기 또는 발전기의 중성점과 대지사이에 저항기를 통해 흐르는 전류를 의미한다.

3. **정격사용시간** : 저항소자의 표면온도가 정격허용온도까지 흐르는 시간을 의미하며 전선로의 지락검출차단장치가 지락사고시 작동되는 시간보다는 다소 여유있게 선정하는 것이 계통 기기 협조에 안정적으로 된다.
10SEC, 30SEC, 60SEC, 10min이내, 연속등으로 구분할 수 있는데 국내에서는 일반적으로 10SEC, 30SEC의 정격을 많이 적용한다.

4. **온도상승한도** : 정격사용시간에 의해 결정된다.
정격사용시간에 따른 온도상승한도는 다음과 같다.

정격사용시간의 종류	온도상승한도
단시간 정격(10min 이내)	760℃
지연시간 정격 (평균 10min)	610℃
연속시간 정격	385℃

위의 표는 해외규격 [IEEE-32(1972)]에 의한 것이며 보통 국내에서는 750℃, 450℃, 350℃로 통용된다.

5. **설 치 장 소** : 옥내 또는 옥외

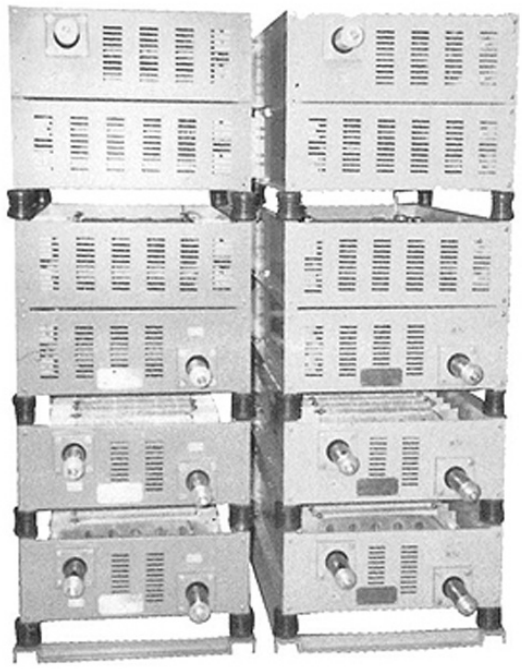

IN-DOOR TYPE

CSR

Current Sensing Resistors

The extremely low resistance(3mΩ) makes these resistors suitable for high power current detection. Various pitches and heights are available. These are all custom-made, non-inductive products exhibiting easy soldering.

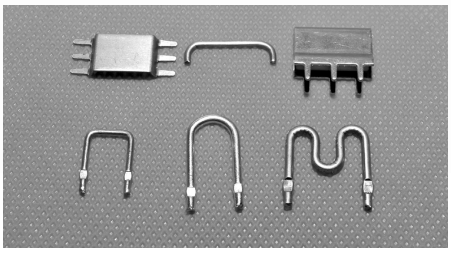

General Specifications

Model	Φd(Diameter)	Max. Current Rating (A)	Resistance Range (mΩ)	Resistivity (mΩ/10㎜)	Resistance Tolerance(%)	Rated Ambient Temp
CSR 04	0.4	2.0	70 ~ 200	38.98	≥ 20mΩ J[±5] < 20mΩ K[±10]	+70℃
CSR 05	0.5	2.5	50 ~ 150	24.95		
CSR 06	0.6	3.0	50 ~ 100	17.34		
CSR 07	0.7	4.0	30 ~ 70	12.74		
CSR 08	0.8	4.5	20 ~ 50	9.747		
CSR 09	0.9	5.0	20 ~ 40	7.702		
CSR 10	1.0	5.5	15 ~ 30	6.238		
CSR 11	1.1	6.0	15 ~ 20	5.157		
CSR 12	1.2	7.0	10 ~ 20	4.332		
CSR 13	1.3	7.5	10 ~ 20	3.693		
CSR 14	1.4	8.0	10 ~ 20	3.184		
CSR 15	1.5	9.0	10 ~ 20	2.773		
CSR 16	1.6	9.5	10 ~ 15	2.436		
CSR 18	1.8	11.0	5 ~ 10	1.925		
CSR 20	2.0	12.0	5 ~ 10	1.560		

Characteristics

Values in [ ] mean change in Ω after test

Temperature Range		40℃~+155℃
Temp. Coefficient		9.0A≥±100ppm/℃ maximum., 9.5A≤±260ppm/℃ maximum
Short Time Overload	±[2%]	Power Rating×w2.5 for 5 sec.
Moisture Resistance	±[2%]	40℃, 95% RH, 240 hours
Heat Resistance	±[2%]	200℃, 2 hours
Solderability	90% Coverage minimum	235℃, 5 sec.
Thermal Shock	±[2%]	Power Rating 30 minutes on, -40℃ 15 minutes off
Load Life	±[5%]	Power Rating, 1.5hours on, 30minutes off, 1000 housrs

Ordering Procedure

Model	Type	Nominal Resistance	Resistance Tolerance	Terminal(pitch)
CSR 16	A	10mΩ	K (±10%)	10㎜

Derating Curve

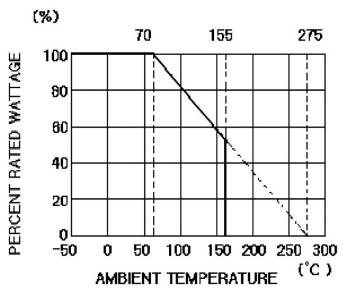

Dimensions(mm)

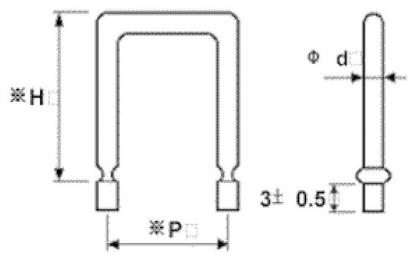

※P, H 치수는 당사와 상의해 주십시요.

※Please consult with is about dimensions 'P' and 'H'

※Forming type is over 1.2Ø

콘센서 방전용 저항기[CDR]

Condenser Discharge Resistor

Condenser Discharge Resistor(CDR) is easy to attach terminal aluminum conderser and is stable to use high-quality metal oxide film resistor, so it is the optimal of discharging.

콘덴서 방전용 저항기는 단자형 알미늄 콘덴서에 취부가 용이하며 저항기 소자를 품질이 우수한 산화피막 소자를 사용하여 매우 안정적이며 방전용으로 최적이다.

General Specifications

Model	Watt	Resistance Range	Tolerance
CDR 10L	10W	200~150KΩ	F [±1%] G [±2%] J [±5%] K [±10%]
CDR 15L	15W	510~200KΩ	
CDR 20L	20W	510~240KΩ	

Characteristics

Item	Specification Limit
Temperature Range	-55℃ ~ 200℃
Insulation Resistance	100MΩ over
Dielectric Strength	AC2,,500V / 1 Min
Temp. Coefficient	±260ppm/℃ max.

Derating Curve

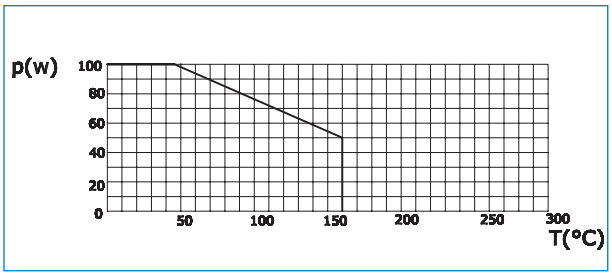

Dimensions

T - type

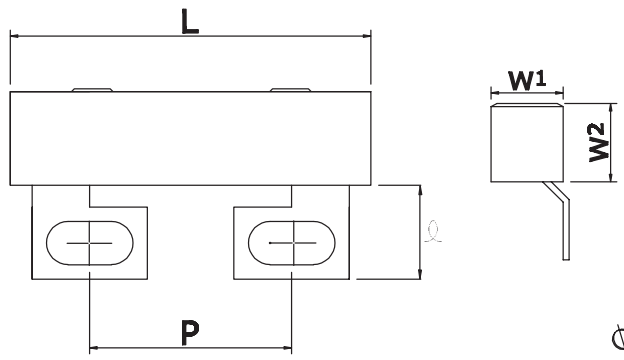

O - type

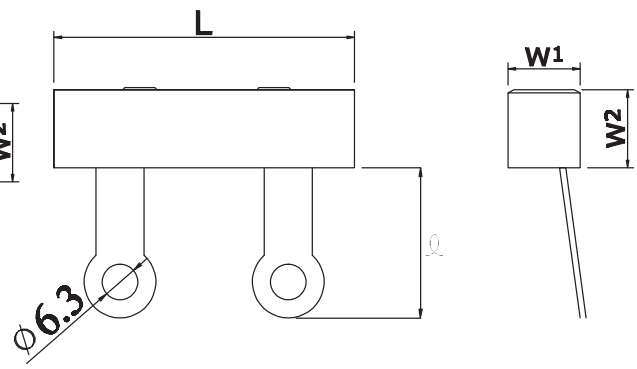

(mm)

Model	Watt	L	W_1	W_2	P	ℓ
CDR 10L	10W	48±2	10±1	10±1	28.6±1	15±2
CDR 15L	15W	48±2	12.5±1	12.5±1	32±1	15±2
CDR 20L	20W	63.5±2	12.5±1	12.5±1	32±1	15±2

(mm)

Model	Watt	L	W_1	W_2	P	ℓ
CDR 10L	10W	48±2	10±1	10±1	24.2±2	26±2
CDR 15L	15W	48±2	12.5±1	12.5±1	24±2	24±2
CDR 20L	20W	63.5±2	12.5±1	12.5±1	24±2	24±2

不燃性 角形抵抗器

Cement Resistor(RWC)

- **不燃性 角形卷線抵抗器**
  Flameproof Square Type Wirewound Resistor …… **[RWC]**
- **無誘導形 角形 卷線抵抗器**
  Non-Inductive Square Type Wirewound Resistor …… **[RWCN]**
- **不燃性 角形酸化金屬皮膜 抵抗器**
  Flameproof Square Type Metal Oxide Film Resistor …… **[RWCM]**
- **角形 溫度휴즈 抵抗器**
  Square Type Thermal Fuse Resistor …… **[RWCF]**

不燃性角形抵抗器는 유리纖維 卷芯上 또는 세라믹 코어上에 金屬抵抗線을 卷線하거나 酸化金屬皮膜을 抵抗體로 하고, 이것을 熱傳導性이 優秀한 세라믹케이스와 無機質의 充塡物로 密封한 抵抗器이다.
小形 電力用으로 많은 電子機器의 電源回路用 抵抗器로 最適이다.

Cement(RWC, RWCN, RWCM, RWCF) resistor is for high dissipation in a small volume. The resistor elements of glass fiber core wirewound. Ceramic core wirewound and metal oxide film, and mounted in a rectangular, potted into a high quality steatite ceramic case using a high temperature high thermal conducting inorganic potting compound. They are most available for power circuit of various electronic equipment.

| 特徵 Features

1. 不燃性材料 使用으로 過電流詩에도 安全.
   Fireproof inorganic construction.
2. 샤시에 直接取付 가능하여 放熱效果가 좋아 小型化 可能.
   Designed to utilize heat sink effect of chassis and designed small.
2. 耐熱性 및 耐溫性이 優秀.
   Excellent resistance to heat and moisture-proof properties.

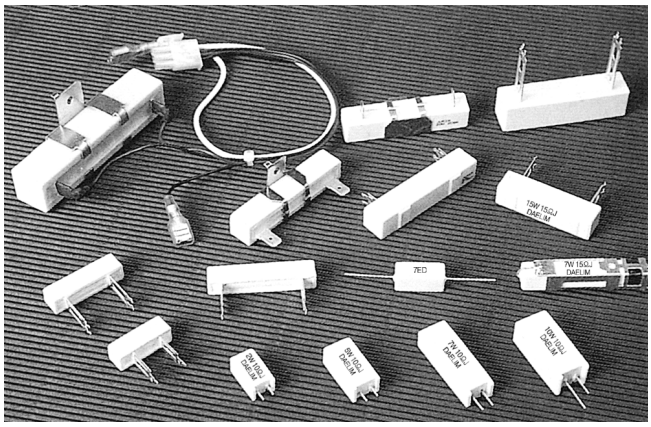

| 主要한 性能 Typical Performance

項目 Item	規格値 Specification Limit
使用溫度範圍 Operating Temp. Range	-40℃~+155℃
抵抗溫度係數 Resistnace Temperature Coefficient	≧20Ω : ±260ppm/℃ >20Ω : ±400ppm/℃
短時間過負荷 Short Time Overload	±(2%+0.05Ω)
납 耐熱性 Resistance to Soldering Heat	±(2%+0.05Ω)
耐濕性 Moisture Resistance	±(5%+0.05Ω)
定格負荷 Load Life	±(5%+0.05Ω)
絕緣抵抗 Insulation Resistance	D.C.500V 20MΩ 以上 (over)

●Temperature Rise Curve(Reference)

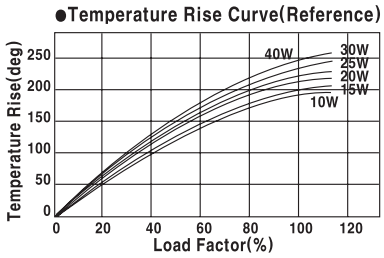

●Derating Curve

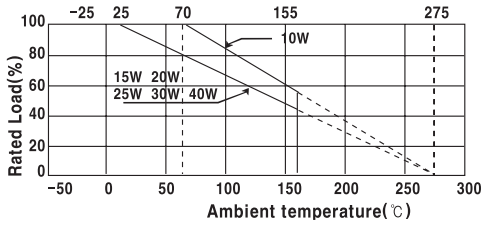

不燃性 角形抵抗器

Cement Resistor(RWC)

A-Type

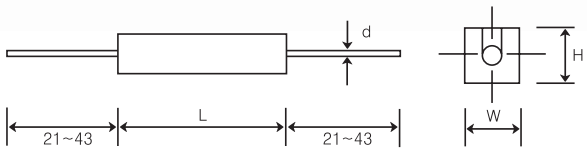

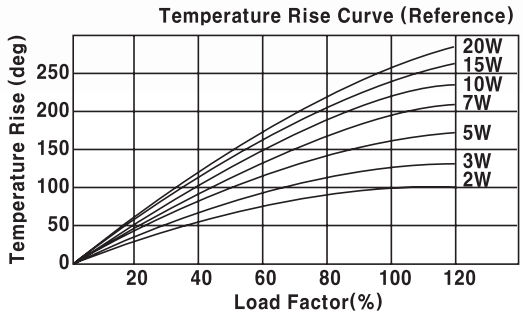

定格 & 寸法 Rating & Dimension

刑 名 Type	定格電力 Power Rating	抵抗値範圍(Ω) R.Range J(±5%)K(±10%)			Dimension (mm)			
		RWCN	RWCM	RWC	L	W	H	D
RWC 02	2W	0.1Ω ~24Ω	47Ω ~100KΩ	0.1Ω ~56Ω	17.5±1.2	6.4±1.0	6.4±1.0	0.8±0.05
RWC 05	5W	0.1Ω ~47Ω	47Ω ~100KΩ	0.1Ω ~470Ω	22±1.5	9.0±1.0	9.0±1.0	0.8±0.05
RWC 07	7W	0.1Ω ~82Ω	68Ω ~100KΩ	0.1Ω ~1.25KΩ	35±1.5	9.0±1.0	9.0±1.0	0.8±0.05
RWC 10	10W	0.1Ω ~82Ω	68Ω ~100KΩ	0.1Ω ~2.0KΩ	48±1.5	9.0±1.0	9.0±1.0	0.8±0.05
RWC 15	15W	0.1Ω ~82Ω	-	0.1Ω ~2.0KΩ	48±1.5	12.5±1.0	12.5±1.0	-
RWC 20	20W	0.2Ω ~120Ω	-	0.2Ω ~3.3KΩ	63.5±1.5	12.5±1.0	12.5±1.0	-

P-Type

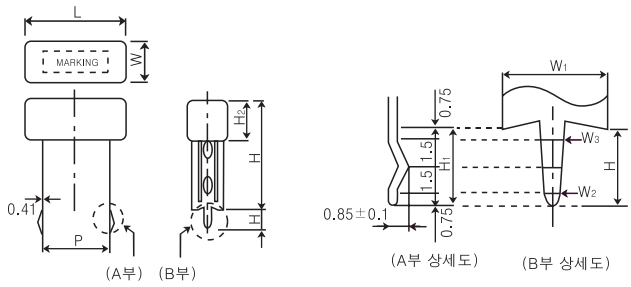

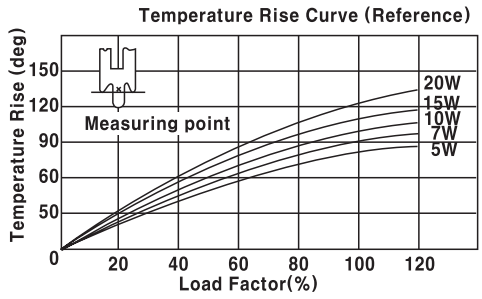

定格 & 寸法 Rating & Dimension

刑 名 Type	定格電力 Power Rating	抵抗値範圍(Ω) R.Range J(±5%)K(±10%)			Dimension (mm)								
		RWCN	RWCM	RWC	L	W	W1	W2	W3	H	H1	H2	P
RWC 05	5W	0.1Ω ~47Ω	47~100KΩ	0.1Ω ~470Ω	27±1.5	10±1.0	7.5±0.4	1.4±0.1	1.5±0.1	26max	4.5±0.5	9.5±1.0	15±1.0
RWC 07	7W	0.1Ω ~82Ω	68~100KΩ	0.1Ω ~1.2KΩ	36±1.5	9.5±1.0	7.5±0.4	1.4±0.1	1.5±0.1	26max	4.5±0.5	9.5±1.0	22.5±1.0
RWC 10	10W	0.1Ω ~82Ω	68~100KΩ	0.2Ω ~2.0KΩ	48±1.5	9.5±1.0	7.5±0.4	1.4±0.1	1.5±0.1	26max	4.5±0.5	9.5±1.0	35±1.0
RWC 15	15W	0.2Ω ~180Ω	-	0.2Ω ~2.0KΩ	48±1.5	12.5±1.2	10±0.4	2.7±0.1	3.0±0.1	42max	5±0.5	12.5±1.2	35±1.0
RWC 20	20W	0.2Ω ~180Ω	-	0.2Ω ~3.3KΩ	63.5±2.0	12.5±1.2	10±0.4	2.7±0.1	3.0±0.1	42max	5±0.5	12.5±1.2	45±1.0
RWC 25	25W	0.2Ω ~180Ω	-	0.2Ω ~3.3KΩ	63.5±2.0	16±1.5	10±0.4	2.7±0.1	3.0±0.1	46max	5±0.5	16±1.2	45±1.0

L Type

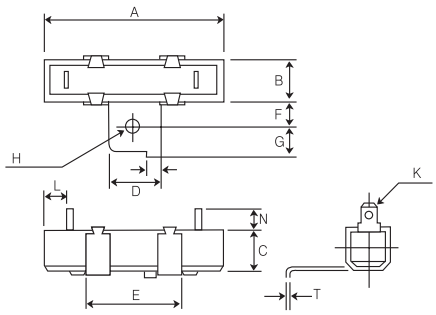

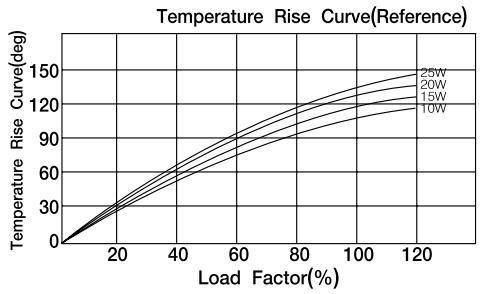

定格 & 寸法 Rating & Dimension

形名 Type	정격전력 Power Rating	저항치범위(Ω)R Range J(±5%)K(±10%)	Dimension(mm)										
			A	B · C	D	E	F	G	H	K	L	N	T
RWC 10	10W	0.2Ω ~2kΩ	48±2	10±1	12±0.2	24	4	5	4	1.3	8.5±2	6±2	0.5
RWC 15	15W	0.2Ω ~2kΩ	48±2	12.5±1	12±0.2	24	8	6	4	1.3	8.5±2	7.5±2	0.6
RWC 20	20W	0.2Ω ~3.3kΩ	63.5±2	12.5±1	12±0.2	24	8	6	4	1.3	8±2	7.5±2	0.6
RWC 25	25W	0.2Ω ~3.3kΩ	63.5±2	16±1.5	12±0.2	24	10	6	4.2	1.3	8±2	10±2	0.6
RWC 30	30W	0.3Ω ~3.9kΩ	75±2	19±1.5	18±0.2	41	10	7	4	3	55±2	10±2	0.8
RWC 40	40W	0.5Ω ~5.0kΩ	90±2	19±1.5	18±0.2	41	10	7	4	3	68±2	10±2	0.8

R Type

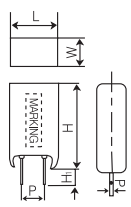

形名 Type	정격전력 Power Rating	저항치범위(Ω) R Range J(±5%) K(±10%)			Dimension(mm)					
		RWCN	RWCM	RWC	L	W	H	H1	P	D
R 02	2W	0.1Ω ~24Ω	47Ω ~56kΩ	0.1Ω ~56Ω	11±1.0	8.0±1.0	20±1.5	4.5±0.5	5.0±1.0	0.8±0.05
R 05	5W	0.1Ω ~47Ω	47Ω ~68kΩ	0.1Ω ~330Ω	14±1.0	9.5±1.5	25.5±1.5	4.5±0.5	5.0±1.0	0.8±0.05
R 07	7W	0.1Ω ~82Ω	100Ω ~100kΩ	0.1Ω ~1.2kΩ	14±1.0	9.5±1.5	40±1.5	4.5±0.5	5.0±1.0	0.8±0.05
R 07(S)	7W(S)	0.1Ω ~82Ω	100Ω ~100kΩ	0.1Ω ~820Ω	14±1.0	9.5±1.5	35±1.5	4.5±0.5	5.0±1.0	0.8±0.05
R 10	10W	0.1Ω ~100Ω	100Ω ~100kΩ	0.1Ω ~1.5kΩ	16±1.0	12.5±1.5	35±1.5	4.5±0.5	5.0±1.0	0.8±1.0

V Type

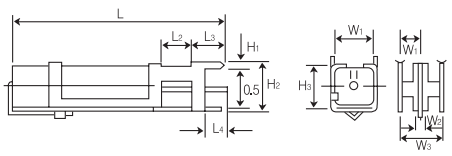

Rated Power(w)	Dimension(mm)									
	L1	L2	L3	L4	H1	H2	H3	W1	W2	W3
7	49±1.5	10±1	5±0.5	6±1.5	1.5±0.1	11±1	9±1	9.5±1	1.5±0.1	10±1
10	62±1.5	10±1	5±0.5	6±1.5	1.5±0.1	11±1	9±1	9.5±1	1.5±0.1	10±1
15	62.5±1.5	10±1	5±0.5	6.5±1.5	2.5±0.2	14±1	12.5±15	9.5±1	2.5±0.2	13±1
20	78±1.5	10±1	5±0.5	6.5±1.5	2.5±0.2	14±1	12.5±15	9.5±1	2.5±0.2	13±1

品名溝成(發注方法) Type Designation

RWC	05	A	10Ω	J
품명 Type	정격전력 Power Rating	형상 Style	공칭저항치 Nominal Resistance	저항치 허용오차 Resistance Tolerance

無誘導形 金屬版 抵抗器

Non-Inductive Type Metal Plate Resistor(MPR)

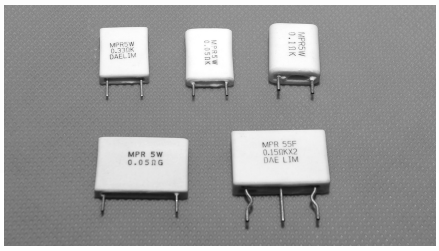

特徵 Features

1. 低抵抗用 精密級 抵抗器이다.
   Low resistance velues and precise resistor.
2. 無誘導形 抵抗器이다.
   Non-inductive type.
3. 複合 抵抗器이다.
   Dual type resistors.

用途 Applications

• 카엠프/Car Ampufier • 오디오/Audio • 모니터/Monitor

主要한 性能 Typical Performance

項目 Item	規格値 Specification Limit
使用溫度範圍 Operating Temp. Range	-40℃~+155℃
抵抗溫度係數 Resistnace Temperature Coefficient	±350ppm/℃
短時間過負荷 Short Time Overload	±(2%+0.05Ω)
납 耐熱性 Resistance Soldering Heat	±(2%+0.05Ω)
耐濕性 Moisture Resistance	±(5%+0.05Ω)
定格負荷 Load Life	±(5%+0.05Ω)
絶緣抵抗 Insulation Resistance	DC.500V 20MΩ 以上 (over)

MPR Round Type

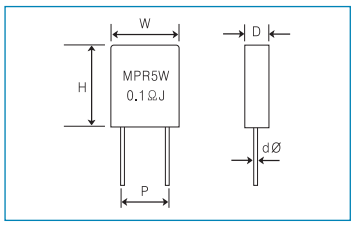

MPR Single(LF) Type

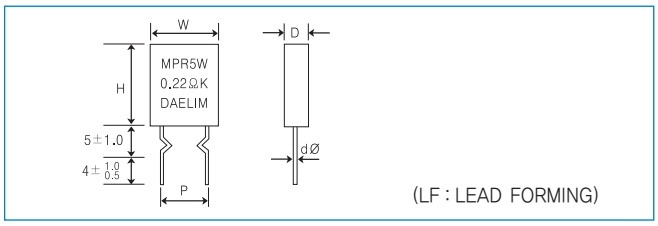

定格 & 寸法 Rating & Dimension

刑 名 Type	定格電力 Power Rating	抵抗範圍(Ω) R.Range	Dimension (mm)				
		J(±5%)K(±10%)	H	W	D	P	dø
MPR 2	2W	0.01Ω ~0.47Ω	8.5±1.0	15±1.0	5±1.0	10±1.0	0.8±0.1
MPR 3	3W	0.01Ω ~0.47Ω	13±1.0	15±1.0	5±1.0	10±1.0	0.8±0.1
MPR 5	5W	0.01Ω ~0.47Ω	18±1.0	15±1.0	5±1.0	10±1.0	0.8±0.1
MPR 5R	5W	0.01Ω ~0.47Ω	18±1.0	16±1.0	8.5±1.0	10±1.0	1.0±0.1

(R : Round-Type)

MPR Dual Type

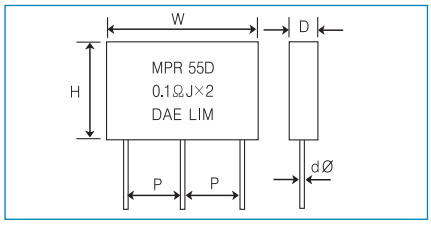

MPR Dual(LF) Type

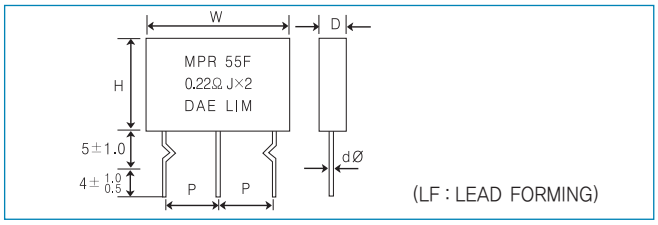

定格 & 寸法 Rating & Dimension

刑 名 Type	定格電力 Power Rating	抵抗範圍(Ω) R.Range	Dimension (mm)				
		J(±5%)K(±10%)	H	W	D	P	dø
MPR 33D	3W+3W	0.05Ω ~0.47Ω	14±1.0	26±1.0	5.0±1.0	10±1.0	0.8±0.1
MPR 55D	5W+5W	0.05Ω ~0.47Ω	18±1.0	26±1.0	5.0±1.0	10±1.0	0.8±0.1
MPR 55DL	5W+5W	0.05Ω ~0.47Ω	18±1.0	28±1.0	8.0±1.0	10±1.0	1.0±0.1

Precision Wire Wound Resistor(RW) 精密形固定卷線抵抗器
Non-Inductive Fixed Wire Wound Resistor(RWN) 無誘導形固定卷線抵抗器

精密形固定卷線抵抗器, 無誘導形固定卷線抵抗器는 特殊磁器棒에 金屬合金抵抗線을 卷線하여 高耐熱性의 실리콘 外裝을 行한 精密級 小形高電力抵抗器로서, 精密電原回路用에 最適이다.(特히 RW는 Monitor, 통신용 SMPS에 최적)

RW/RWN type resistor is wound with a single layer of resistance wire on a ceramic steatite or alumina core and protected by special high temperature silicone coating. This precision subminiature types, offering high power dencity, are the most available for precision power circuit applications.

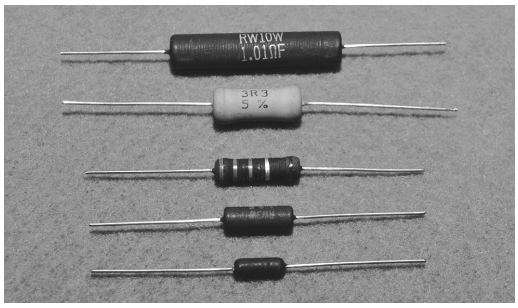

外形寸法 Dimension

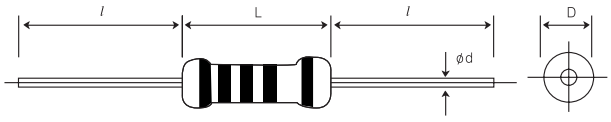

Marking : 5W Over-Alpha/Numeric

形名 Type	寸 法 Dimension(m/m)			
	L ±1	D ±0.5	Ød ±0.05	ℓ
1/2W / 1W(S)	9.0	3.3	0.7~0.8	25~31
1W / 2W(S)	11.0	3.8	0.8	25~31
2W / 3W(S)	15.0	5.5	0.8	25~31
5W(S)	19.0	5.5	0.8	25~31
5W	25.0	8.5	1.0	25~31
7W	40.0	8.5	1.0	25~31
10W	53.0	8.5	1.0	25~31

定格 Rating

形名 Type	定格電力 Power Rating	最高使用電壓 MaxWorking Voltage	抵抗値範圍 Resistance Range(Ω)		使用溫度範圍 Operating Temp. Range	抵抗値許容差 Resistance Tolerance	定格周圍溫度 Rating Ambient Temp.
			RW	RWN			
1/2W / 1W(S)	1W	100V	0.05~50	0.05~10	-40℃~+200℃	±1%(F) ±5%(J) ±10%(K)	20℃
1W / 2W(S)	2W	130V	0.05~50	0.05~20			
2W / 3W(S)	3W	150V	0.05~330	0.05~50			
5W(S) / 5W	5W	200V	0.1~1K	0.1~50			
7W	7W	320V	0.5~2.2K	0.1~50			
10W	10W	320V	0.5~3.0K	0.1~50			

RWN : Non-Inductive

特性 Performance Specification

項目 Test Item	規格値 Specification Limits
溫度係數 Temp. Coefficient	±400ppm/℃ below 9.9Ω ±200ppm/℃ 10Ω to 200 ±400ppm/℃ 200Ω and above
絶緣抵抗 Insulation Resistance	Min 100MΩ
耐電壓 Delectric with, vol.	±(2%+0.05Ω)
短時間過負荷 Short-time overload	±(2%+0.05Ω)
耐濕性 Moisture Resistance	±(5%+0.05Ω)
溫負荷壽命 Load Life	±(5%+0.05Ω)

減曲線 Derating Curve

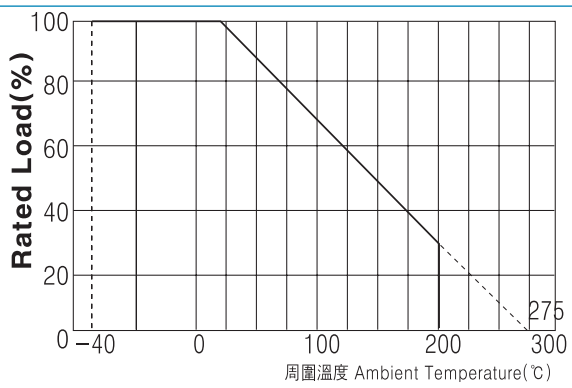

品名溝成(發注方法) Type Designation

RW	02	T	10Ω	F
품명 Type	정격전력 Power Rating	형상 Style T:Taping S:Straight F:Forming	공칭저항치 Nominal Resistance	저항치 허용오차 Resistance Tolerance

酸化金屬皮膜固定抵抗器

Fixed Metal Oxide Film Resistor(MOR)

酸化金屬皮膜固定抵抗器는 獨自의 自動生産Line 嚴格한 品質管理를 기초로 하여 製造되어지는 信賴性이 높은 抵抗器이다.

難燃性 및 不燃性形의 抵抗器로 1/2W에서 5W까지 갖추어져 있어 電力用 抵抗器로서 最適이다.

MOR type resistor, is a highly reliable and pyrolytically deposited on a ceramic substrate in a high temperature and oxidizing atmosphere. Which has been manufactured through the rationalized automation line, and high quality control system. Flame retardant or flame proof types of the metal oxide film resistor rating from 1/2W to 5W are available. They are ideally suitable for power circuit use.

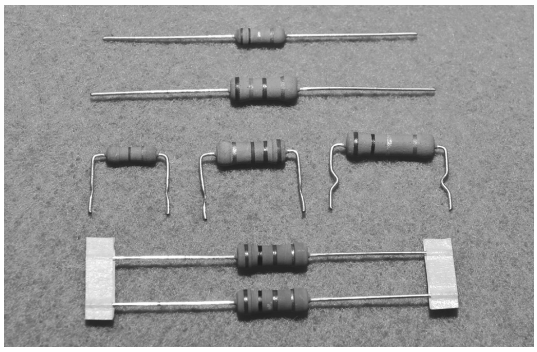

特徵 Features

1. 高溫中에서도 安全
   Excellent mechanical and thermal strength at a high temperature.
2. 過負荷 狀態에서도 發炎이 없다.
   Free from flame overloaded to the flame resistant coating.
3. 펄스 回路에 最適
   Suitable to pluse circuits.

定格 Rating

刑 名 Style	定格電力 Rated Power (at 70℃)	最高使用電壓 Max. Working Voltage	最高過負荷電壓 Max. Overload Voltage	抵抗値範壓 Resistance Range (Ω)	抵抗値許容差 Resistance Tolerance
1/2W	0.5W	250V	400V	0.5~5.0K	
1W	1W	350V	600V	0.5~70K	G(±2%)
2W	2W	350V	600V	0.5~100K	
3W	3W	500V	800V	0.5~300K	J(±5%)
5W	5W	750V	1,000V	20~400K	

主要한 性能 Typical Performance

項目 Item	規格値 Specification Limit
使用溫度範圍 Operating Temp. Range	-55℃~200℃
抵抗溫度係數 Resistance Temperature Coefficient	±350ppm/℃
短時間過負荷 Short Time Overload	±(1%+0.05Ω)
납 耐熱性 Resistance Soldering Heat	±(1%+0.05Ω)
溫度Cycle Temp. Cycling	±(1%+0.05Ω)
耐濕負荷 Moisture Resistance	±(5%+0.05Ω)
負荷壽命 Load Life	±(5%+0.05Ω)

外形寸法 Dimension

刑名 Type	寸法 Dimension(m/m)			
	L	D	ød	l
MOR 1/2W (MORS 1W)	9±0.5	3.3±0.5	0.8±0.05	25~31
MOR 1W (MORS 2W)	11±1.0	3.8±0.5	0.8±0.05	25~31
MOR 2W (MORS 3W)	15±1.5	5.5±1.0	0.8±0.05	25~31
MOR 3W (MORS 5W)	24±1.5	8.0±1.0	0.8±0.05	25~31

( )Mini Size

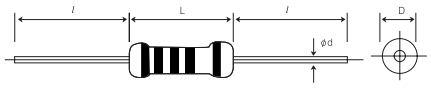

品名溝成(發注方法) Type Designation

MOR	02	T	10Ω	J
품명 Type	정격전력 Power Rating	형상 Style T:Taping/ S:Straight F:Forming	공칭저항치 Nominal Resistance	저항치 허용오차 Resistance Tolerance